This is a digital copy of a book that was preserved for generations on library shelves before it was carefully scanned by Google as part of a project to make the world's books discoverable online.

It has survived long enough for the copyright to expire and the book to enter the public domain. A public domain book is one that was never subject to copyright or whose legal copyright term has expired. Whether a book is in the public domain may vary country to country. Public domain books are our gateways to the past, representing a wealth of history, culture and knowledge that's often difficult to discover.

Marks, notations and other marginalia present in the original volume will appear in this file - a reminder of this book's long journey from the publisher to a library and finally to you.

Usage guidelines

Google is proud to partner with libraries to digitize public domain materials and make them widely accessible. Public domain books belong to the public and we are merely their custodians. Nevertheless, this work is expensive, so in order to keep providing this resource, we have taken steps to prevent abuse by commercial parties, including placing technical restrictions on automated querying.

We also ask that you:

+ *Make non-commercial use of the files* We designed Google Book Search for use by individuals, and we request that you use these files for personal, non-commercial purposes.
+ *Refrain from automated querying* Do not send automated queries of any sort to Google's system: If you are conducting research on machine translation, optical character recognition or other areas where access to a large amount of text is helpful, please contact us. We encourage the use of public domain materials for these purposes and may be able to help.
+ *Maintain attribution* The Google "watermark" you see on each file is essential for informing people about this project and helping them find additional materials through Google Book Search. Please do not remove it.
+ *Keep it legal* Whatever your use, remember that you are responsible for ensuring that what you are doing is legal. Do not assume that just because we believe a book is in the public domain for users in the United States, that the work is also in the public domain for users in other countries. Whether a book is still in copyright varies from country to country, and we can't offer guidance on whether any specific use of any specific book is allowed. Please do not assume that a book's appearance in Google Book Search means it can be used in any manner anywhere in the world. Copyright infringement liability can be quite severe.

About Google Book Search

Google's mission is to organize the world's information and to make it universally accessible and useful. Google Book Search helps readers discover the world's books while helping authors and publishers reach new audiences. You can search through the full text of this book on the web at `http://books.google.com/`

3 3433 06907595 4

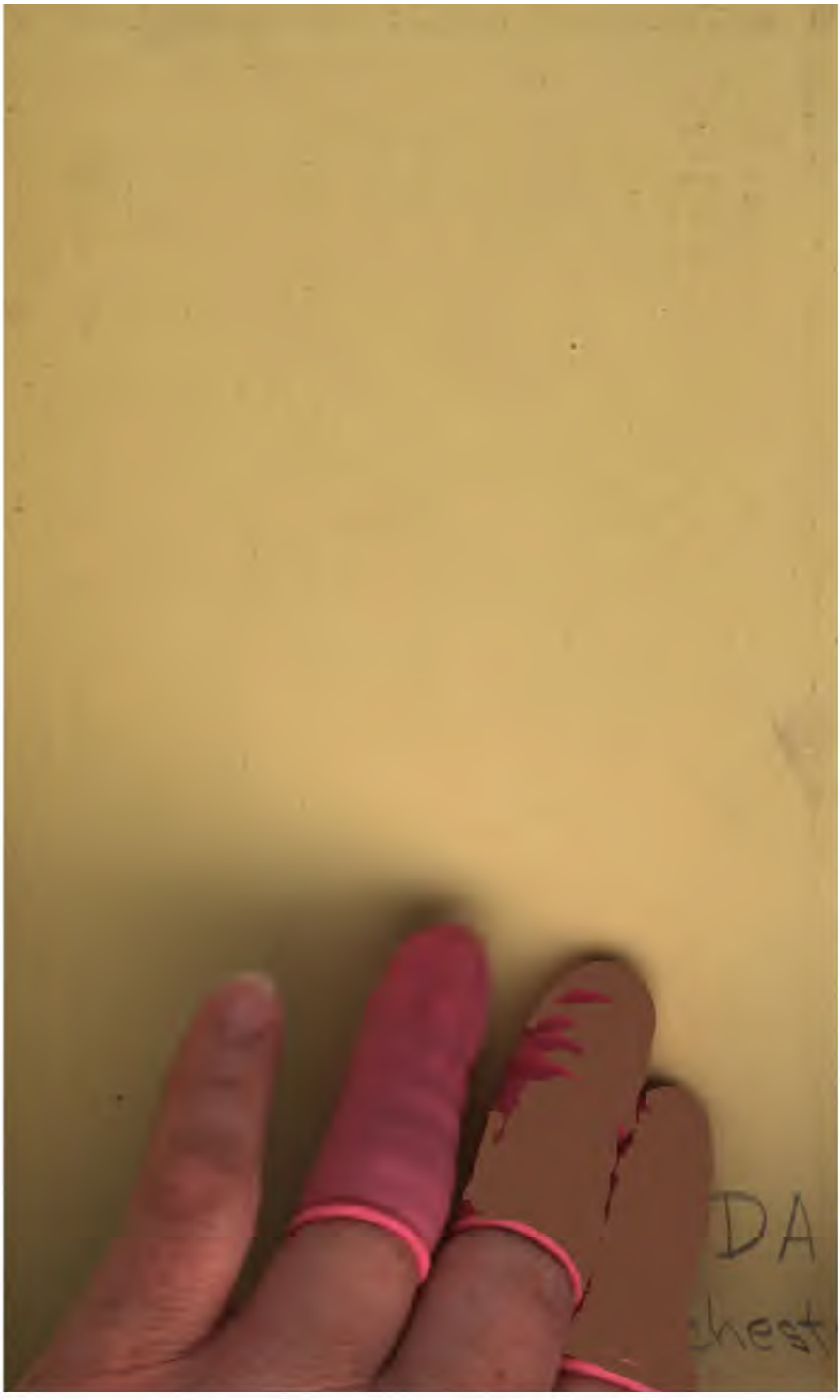
DA
chest

3-VDA
Manchest

TRANSACTIONS,

1898.

PUBLISHED BY THE ASSOCIATION.

MANCHESTER:
HERALD & WALKER, PRINTERS, POOL FOLD CHAMBERS, OFF CHAPEL WALKS.
1899.

THE NEW YORK
PUBLIC LIBRARY
879718A
ASTOR, LENOX AND
TILDEN FOUNDATIONS
R 1937 L

CONTENTS.

1898.

	PAGE.
Index	—
List of Plates	—
Inaugural Address by the President, Mr. Henry Webb	1
Some Engineering Appliances in Mining, by C. M. Percy	25
The Balancing of Engines, by James Whitcher	49
Topical Questions	89
Some Points in Modern Steam Engine Practice, by Henry Hodgson	101
The Manchester Sewage Problem, by M. Ingram	137
The Use of Steel in Buildings, by Edward Wood	165
Topical Questions	190
Annual Report of Council, 1898	201

INDEX.

1898.

ADAMS, E., remarks on Japan, 110.

ADDRESS OF PRESIDENT, Henry Webb, 1.—Sundry economies, 1.—Traffic, 2.—Prices of materials, 3.—Blast furnaces, 4.—Rolling mills, 5.—Forgings, 8.—Workshops, 9.—Commercial department, 10.—Drawing Office, 11.—Tools, 11.—Tool steel, 13.—Handling material, 14.—Locomotives, 14.—Electricity and its appliances, 15.—Gas Engines and the transmission of power, 16.—Capital expenditure, 18.—Labour, 19.—Thanks, 22.—Reply, 24.

ANNUAL REPORT OF COUNCIL, 1898, 203.—Additions to Membership, 203.—Deaths, 204.—Resignations, 204.—Erasures, 204.—List of Excursions, 205.—Papers read, 205.—Anniversary Dinner, 206.—Opening of Discussion Session, 213.—Library, 214.—Reports of Excursions, &c.: Rugby, 215.—Knowsley, 215.—Conversazione, Art Gallery, 216.—Obituary: Sir B. A. Dobson, 217.—D. Johnston, 218.—J. W. Hulse, 220.—M. Gledhill, 220.—T. Blears, 221.—J. H. Purves, 221.—R. C. Ross, 221.—J. Shenton, 221.—J. E. Kelsall, 221.—T. Wrigley, 222.—J. Marshall, 222.—Treasurer's General Cash Account, 223.—Superannuation Fund Account, 224.

ASHBURY, T., remarks on Balancing of Engines, 73.

BOLAS, J., remarks on Mining Appliances, 42.—Balancing of Engines, 77.

BOSWELL, S., remarks on Mining Appliances, 38.—Dressing Castings, 93.—Sand Blasting, 97.—Feed Water and Live Steam, 199.

BATES, HENRY, remarks on Mining Appliances, 43.—Steel in Buildings, 185

BATES, J., remarks on Pickled Castings, 91.—Dressing Castings, 94.

BALANCING OF ENGINES: Paper on, by James Whitcher, 49.—Discussion 73.—3 Plates.

BULLARD, —, remarks on America and England, 109.

BERRY, C. H., remarks on Sewage Problem, 151.

BEASTOW, J. H., remarks on Pickled Castings, 90.

BOLTON, A., remarks on Modern Engine Practice, 117.

BUTTERWORTH. J., remarks on Electric Welding Steel Castings, 99.—Modern Engine Practice, 126.—Sewage Problem, 158.—Machine Tools, 195.

BUILDINGS, STEEL IN: Paper on, by Edward Wood, 165.—Material, 169.—Uses for steel, 171.—Columns and standards, 171.—Beams and girders, 173.—Roofs, 175.—Flooring, 177.—Partitions and doors, 177 Staircases, 177.—Discussion, 178.—6 Plates.

CONSTANTINE, E. G., remarks on Mining Appliances, 41.

CARTWRIGHT, —, remarks on Sewage Problem, 154.

CUNLIFFE, J. Radcliffe, remarks on Sewage Problem, 161.

DANIELS, THOMAS, remarks on Mining Appliances, 41.—Dressing Castings, 94.—Electrically Welding Iron Castings, 97.—Electrically Welding Steel Castings, 98.—Sewage Problem, 159.

DAY, C., remarks on Modern Engines, 113.

DIXON, G., remarks on Modern Engine Practice, 122.

DIXON, SAMUEL, remarks on Machine Tools, 194.

ETCHELLS, A., remarks on Feed Water and Live Steam, 198.

FREEMAN, G. F., remarks on Pickled Castings, 90, 92.—Dressing Castings, 94.—Steel in Buildings, 178.

FORD, —, remarks on Sewage Problem, 150.

FOX, W., remarks on Tool Rooms, 191.

GASS, G. P., JR., remarks on Mining Appliances, 42.

GREGORY, R., remarks on balancing of Engines, 78.

HODGSON, HENRY, remarks on Mining Appliances, 38, 46.—Electric Welding Steel Castings, 99.—Paper on Modern Steam Engines, 109.—Remarks on Steel in Buildings, 184.—Tool Rooms, 99.—Machine Tools, 192, 195.

HUNTER, W. H., remarks on Balancing of Engines, 75.—Steel in Buildings, 179.

HOLLAND, R. S., remarks on Balancing of Engines, 77.

HALL, J.. remarks on Tool Rooms, 190.

INGHAM, W., remarks on Mining Appliances, 40.—Balancing of Engines, 80, 81.—Modern Engines, 114.—Feed Water and Live Steam, 197.

INGRAM, MATTHEW, remarks on Mining Appliances, 42.—Paper on The Manchester Sewage Problem, 137.—Remarks on Steel in Buildings, 183.

JOHNSON, W., remarks on Sewage Problem, 159.

KELSALL, J. E., remarks on Mining Appliances, 41.—Electrically Welding Iron Castings, 96.—Electrically Welding Steel Castings, 98.

LAWSON, W., remarks on Pickled Castings, 90.—Steel in Buildings, 184.—Tool Rooms, 191.—Machine Tools, 194.

MINING, ENGINEERING APPLIANCES IN: Paper on, by C. M. Percy, 25.—Mechanical engineering in mining, 26.—Past influence of the mechanical engineer in mining, 27.—Steam generation, 27.—Colliery ropes, 27.—Conveyance in the mine, 28.—Pumping, 29.—Winding, 29.—Machinery, safety in winding, 29.—Ventilation, 30.—Dressing and loading coal, 31.—Lines for further improvements, 32.—Heavy coal consumption for colliery machinery, 32.—Winding appliances, 33.—Haulage and pumping, 34.—Ventilation, 35.—Coal cutting machines, 36.—Discussion, 38.—Reply, 43.

MARSHALL, E., remarks on Pickled Castings, 91.

MUDDIMAN, J., remarks on Dressing Castings, 93.

MITTON, J., remarks on Modern Engine Practice, 124.—Feed Water and Live Steam, 200.

MANCHESTER SEWAGE PROBLEM: Paper on, by M. Ingram, 137.—Solution to be first, Political, 140.—Secondly, Scientific, 143.—Thirdly, Mechanical, 145.—Discussion, 150.

NASMITH, JOS., remarks on Address, 22.—Dressing Castings, 95.—Sewage Problem, 151.—Machine Tools, 194.

NODAL, JOS., remarks on Steel in Buildings, 185.

PERCY, C. M., Paper on Engineering Appliances in Mining, 38.

PARRY, JOSEPH, remarks on Balancing of Engines, 73, 81.—Modern Engines, 117.

REED, F. W., remarks on Mining Appliances, 42.—Pickled Castings, 91.—Dressing Castings, 96.

RENOLD, H., remarks on Balancing of Engines, 79.—Pickled Castings, 89.—Steel in Buildings, 181.—Tool Rooms, 189.—Machine Tools, 196.

REA, A., remarks on Pickled Castings, 92.

SLADE, F., remarks on Address, 23.

SAXON, JAMES, remarks on Modern Engines, 110.—Sewage Problem, 155.

SOWTER, G. H., remarks on Mining Appliances, 43.

SAXON, ALFRED, remarks on Balancing of Engines, 74.—Modern Steam Engines, 118.—Machine Tools, 196.—Feed Water and Live Steam, 198.

SAXON, GEORGE, remarks on Machine Tools, 196.

STEAM ENGINE PRACTICE, MODERN: Paper on, by Henry Hodgson, 101.—Types of engines, 101.—Proportions of cylinders, 102.—Valves, 102.—Pistons, 104.—Steam pipes, 105.—Valve boxes, 107.—Steam chambers, 107.—Steam jackets, 108.—Discussion, 109.—Reply, 127.

STANIFORTH, R. A., remarks on Sewage Problem, 160.

SIMPSON, COUNCILLOR, remarks on Sewage Problem, 160.

TOPICAL QUESTIONS: Advantages of Pickling Castings, 89.—Best method of Dressing Castings, 93.—Electric Welding of Iron Castings, 96.—Sand Blasting *v.* Nickel-plating for producing Surfaces on Cast Iron, 97.—Electric Welding of Steel Castings, 98.—Tool Rooms, their advantages and disadvantages, 189.—Can the use of Machine Tools be carried too far, so as not to be ecomical? 192.—Is there any gain in economy by Heating Feed Water with Live Steam from Boiler? 197.

TAYLOR, J., remarks on Dressing Castings, 95.—Modern Engine Practice, 124.

WALTHEW, J., remarks on Mining Appliances, 46.

WEBB, HENRY, Inaugural Address, 1.—Remarks on Mining Appliances, 46. Balancing of Engines, 81.—Pickled Castings, 93.—Dressing Castings, 95.—Electrically Welded Iron Castings, 97.—Steel Castings, 99.—Modern Progress, 109.—Tool Rooms, 190, 192.

WHITCHER, JAMES, Paper on the Balancing of Engines, 49.

WICK, F. J., remarks on Tool Rooms, 189, 192.

WATSON, J., remarks on Balancing of Engines, 79.—Modern Engines, 124.

WALTON, T., remarks on Modern Engines, 120.—Steel in Buildings, 186.—Feed Water and Live Steam, 200.

WOOD, EDWARD, Paper on Use of Steel in Buildings, 165.

3-VDA
Manchest

MARSHALL, E., remarks on Pickled Castings, 91.

MUDDIMAN, J., remarks on Dressing Castings, 93.

MITTON, J., remarks on Modern Engine Practice, 124.—Feed Water and Live Steam, 200.

MANCHESTER SEWAGE PROBLEM: Paper on, by M. Ingram, 137.—Solution to be first, Political, 140.—Secondly, Scientific, 143.—Thirdly, Mechanical, 145.—Discussion, 150.

NASMITH, JOS., remarks on Address, 22.—Dressing Castings, 95.—Sewage Problem, 151.—Machine Tools, 194.

NODAL, JOS., remarks on Steel in Buildings, 185.

PERCY, C. M., Paper on Engineering Appliances in Mining, 38.

PARRY, JOSEPH, remarks on Balancing of Engines, 73, 81.—Modern Engines, 117.

REED, F. W., remarks on Mining Appliances, 42.—Pickled Castings, 91.—Dressing Castings, 96.

RENOLD, H., remarks on Balancing of Engines, 79.—Pickled Castings, 89.—Steel in Buildings, 181.—Tool Rooms, 189.—Machine Tools, 196.

REA, A., remarks on Pickled Castings, 92.

SLADE, F., remarks on Address, 23.

SAXON, JAMES, remarks on Modern Engines, 110.—Sewage Problem, 155.

SOWTER, G. H., remarks on Mining Appliances, 43.

SAXON, ALFRED, remarks on Balancing of Engines, 74.—Modern Steam Engines, 118.—Machine Tools, 196.—Feed Water and Live Steam, 198.

SAXON, GEORGE, remarks on Machine Tools, 196.

STEAM ENGINE PRACTICE, MODERN: Paper on, by Henry Hodgson, 101.—Types of engines, 101.—Proportions of cylinders, 102.—Valves, 102.—Pistons, 104.—Steam pipes, 105.—Valve boxes, 107.—Steam chambers, 107.—Steam jackets, 108.—Discussion, 109.—Reply, 127.

STANIFORTH, R. A., remarks on Sewage Problem, 160.

SIMPSON, COUNCILLOR, remarks on Sewage Problem, 160.

TOPICAL QUESTIONS: Advantages of Pickling Castings, 89.—Best method of Dressing Castings, 93.—Electric Welding of Iron Castings, 96.—Sand Blasting *v.* Nickel-plating for producing Surfaces on Cast Iron, 97.—Electric Welding of Steel Castings, 98.—Tool Rooms, their advantages and disadvantages, 189.—Can the use of Machine Tools be carried too far, so as not to be ecomical? 192.—Is there any gain in economy by Heating Feed Water with Live Steam from Boiler? 197.

TAYLOR, J., remarks on Dressing Castings, 95.—Modern Engine Practice, 124.

WALTHEW, J., remarks on Mining Appliances, 46.

WEBB, HENRY, Inaugural Address, 1.—Remarks on Mining Appliances, 46. Balancing of Engines, 81.—Pickled Castings, 93.—Dressing Castings, 95.—Electrically Welded Iron Castings, 97.—Steel Castings, 99.—Modern Progress, 109.—Tool Rooms, 190, 192.

WHITCHER, JAMES, Paper on the Balancing of Engines, 49.

WICK, F. J., remarks on Tool Rooms, 189, 192.

WATSON, J., remarks on Balancing of Engines, 79.—Modern Engines, 124.

WALTON, T., remarks on Modern Engines, 120.—Steel in Buildings, 186.—Feed Water and Live Steam, 200.

WOOD, EDWARD, Paper on Use of Steel in Buildings, 165.

MARSHALL, E., remarks on Pickled Castings, 91.

MUDDIMAN, J., remarks on Dressing Castings, 93.

MITTON, J., remarks on Modern Engine Practice, 124.—Feed Water and Live Steam, 200.

MANCHESTER SEWAGE PROBLEM: Paper on, by M. Ingram, 137.—Solution to be first, Political, 140.—Secondly, Scientific, 143.—Thirdly, Mechanical, 145.—Discussion, 150.

NASMITH, JOS., remarks on Address, 22.—Dressing Castings, 95.—Sewage Problem, 151.—Machine Tools, 194.

NODAL, JOS., remarks on Steel in Buildings, 185.

PERCY, C. M., Paper on Engineering Appliances in Mining, 38.

PARRY, JOSEPH, remarks on Balancing of Engines, 73, 81.—Modern Engines, 117.

REED, F. W., remarks on Mining Appliances, 42.—Pickled Castings, 91.—Dressing Castings, 96.

RENOLD, H., remarks on Balancing of Engines, 79.—Pickled Castings, 89.—Steel in Buildings, 181.—Tool Rooms, 189.—Machine Tools, 196.

REA, A., remarks on Pickled Castings, 92.

SLADE, F., remarks on Address, 23.

SAXON, JAMES, remarks on Modern Engines, 110.—Sewage Problem, 155.

SOWTER, G. H., remarks on Mining Appliances, 43.

SAXON, ALFRED, remarks on Balancing of Engines, 74.—Modern Steam Engines, 118.—Machine Tools, 196.—Feed Water and Live Steam, 198.

[illegible], GEORGE, remarks on Machine Tools, 196.

STEAM ENGINE PRACTICE, MODERN: Paper on, by Henry Hodgson, 101.—Types of engines, 101.—Proportions of cylinders, 102.—Valves, 102.—Pistons, 104.—Steam pipes, 105.—Valve boxes, 107.—Steam chambers, 107.—Steam jackets, 108.—Discussion, 109.—Reply, 127.

STANIFORTH, R. A., remarks on Sewage Problem, 160.

SIMPSON, COUNCILLOR, remarks on Sewage Problem, 160.

TOPICAL QUESTIONS: Advantages of Pickling Castings, 89.—Best method of Dressing Castings, 93.—Electric Welding of Iron Castings, 96.—Sand Blasting *v.* Nickel-plating for producing Surfaces on Cast Iron, 97.—Electric Welding of Steel Castings, 98.—Tool Rooms, their advantages and disadvantages, 189.—Can the use of Machine Tools be carried too far, so as not to be ecomical? 192.—Is there any gain in economy by Heating Feed Water with Live Steam from Boiler? 197.

TAYLOR, J., remarks on Dressing Castings, 95.—Modern Engine Practice, 124.

WALTHEW, J., remarks on Mining Appliances, 46.

WEBB, HENRY, Inaugural Address, 1.—Remarks on Mining Appliances, 46. Balancing of Engines, 81.—Pickled Castings, 93.—Dressing Castings, 95.—Electrically Welded Iron Castings, 97.—Steel Castings, 99.—Modern Progress, 109.—Tool Rooms, 190, 192.

WHITCHER, JAMES, Paper on the Balancing of Engines, 49.

WICK, F. J., remarks on Tool Rooms, 189, 192.

WATSON, J., remarks on Balancing of Engines, 79.—Modern Engines, 124.

WALTON, T., remarks on Modern Engines, 120.—Steel in Buildings, 186.—Feed Water and Live Steam, 200.

WOOD, EDWARD, Paper on Use of Steel in Buildings, 165.

LIST OF PLATES.

To illustrate "BALANCING OF ENGINES." Page 86.

Plate 1. Diagrams Illustrating Balancing of Engines.
,, 2. ,, ,, ,, ,,
,, 3. ,, ,, ,, ,,

To illustrate "MODERN STEAM ENGINE PRACTICE." Page 115.

Diagram of Water Consumption.

To illustrate "THE USE OF STEEL IN BUILDINGS." Page 188.

Plate 1. Types of Steel Columns.
,, 2. ,, Girders.
,, 3. ,, Roofs.
,, 4. Ground Plan of typical modern City Building.
,, 5. Steel Framework for modern City Building.
,, 6. ,, ,, ,, ,,

INAUGURAL ADDRESS

BY THE PRESIDENT,

MR. HENRY WEBB,

(BURY)

DELIVERED SATURDAY, 15th JANUARY, 1898.

It is increasingly difficult for the President of this and kindred Associations to choose a subject for an Inaugural Address. So much has been said on every topic, that one is at a loss to choose something that will be both interesting and instructive.

We may take it for granted that in the near future we are not likely to have any great change affecting our industries, such as that caused by the introduction of Bessemer and Siemens steel; or later, of the Basic process of making steel, which has enabled the poor ores of this and other countries to compete with steel made from richer and purer ores. Or the changes made by the introduction of hydraulic power, gas, compressed air, and electricity; or by the many labour saving tools which have been so much in evidence the last few years. But, in the future, changes can and will be made, in better organisation, quicker handling of the materials used, and in many improvements which may not be much in themselves, but in the sum make successful shop management. My subject is :—

SUNDRY ECONOMIES.

There is an impression in the minds of a few employers of labour that the only hope of successful competition with foreign countries where labour is comparatively cheap and hours are long, is to be found in the reduction of the wage scale, or increase of hours to approximate to the low standard prevailing in those countries. May not the true secret of success be in other directions? The majority of employers prefer to pay

high wages, if they can have freedom of action, so that they can use a combination of improved labour-saving machines, operated by intelligent mechanics, whose services would be worth a high price. Improvements can be made by adopting certain fundamental principles in methods of manufacture, such as interchangeability of parts, and the designing of special machines to perform specific operations only, whereby the output is increased, division of labour systematised, the costly work of finishing and adjusting minimised, and the highest development of skill, accuracy, and despatch acquired. This has been done in making watches and cycles, and in a minor degree could be adopted in other manufactures.

Permit me to name a few things trivial in themselves, but which would materially improve our workshops, and in trying to say something about them, I shall compare English and American methods. Many of you are aware that I have recently made a short trip to the States, and it may be interesting if I name some of the things I have seen.

TRAFFIC.

In handling large quantities of traffic, have we reached the least possible expense? Nothing perhaps has tended more to bring about a greater change in the relative position of works and markets than reductions in the rates of freights, so that the United States of America is not much if any farther from the market of Europe, than Birmingham is from London, because the freight charges are about the same in each case. The result with regard to the competition in Europe by America is their remarkably cheap transport by rail, as well as by water, combined with natural advantages. American ore traffic is now being carried over some railways at one-sixth of a penny per ton per mile, and coal at even the lower rate of 0·14 of a penny per ton per mile. Can no improvement be made in handling such things as coal and ore in this conntry?

In America a steamer is loaded with 3,000 tons of ore under the hour, in fact, the speed with which vessels are loaded and unloaded is little short of marvellous. Vessels frequently load and depart with a cargo of 3,500 or 4,000 tons within two hours from the time they reach port. From 15,000 to 40,000 tons of ore are handled daily at Two Harbors with a force of men that at first sight seems totally inadequate. The design of the yard, and the approach to the ore docks at Two Harbors is said to be a fine example of railroad construction, and in the handling of large and irregular volumes of traffic this little iron ore road sets an example that could be studied with profit by Trunk lines.

Can nothing be done in this country by railway companies in the increased capacity of wagons? In this district 10 tons seems to be the maximum. If instead, we could have 20 to 50 ton trucks for carrying minerals and heavy goods, the advantage derived from the increased facilities in handling these materials would have considerable influence in reducing the cost. Large reductions in the cost of transport, and the dealing with large and heavy masses of both raw and finished materials are important factors in enabling the industries of this country to maintain their hold on the markets of the world.

PRICES OF MATERIALS.

The prices given to me as the sums the Americans were paying at Pittsburgh, delivered in the works, are **good round furnace coal**, 3/6 per ton. **Slack**, 1/6 per ton. **Connesville coke** (equal to Durham), 5/6 per ton. The American ton is 2,000lbs. **Ores**—The United States can not only command richer and cheaper ores, but they have the fundamental advantage of possessing unlimited indigenous supplies, whereas this country is now producing 33 per cent. of its total output of iron from imported ores, about the extent and duration of which there is a considerable amount of anxiety. Some few American firms are using natural gas and oil for heating purposes, but

to nothing like the extent they were using it in 1890. It is fast "giving out."

BLAST FURNACES.

In 1890 some members of this Association visited America, and they had an unique opportunity of examining its industries, and nothing surprised them more than the American blast furnace practice. Beginning with the accumulated experience of England and Europe, they had gone "one better," and we were astonished at the output. In England the pressure of the blast was 4½lbs. in America 9lbs. to 10lbs., and everything in proportion. My object in going to America again was to see if during the past seven years our American friends had stood still, gone back, or advanced.

The Duquesne blast furnace plant of the Carnegie Steel Co. would take an evening to describe, and I must refer you for details of their equipment to the engineering journals. I may say Nos. 1 and 2 furnaces have ten 7-in. tuyerès ; Nos. 3 and 4 furnaces twenty 5-in. tuyerès, the pressure of blast at the tuyerès is *15lbs., but this may be raised to 25lbs.* There are 4 stoves to each furnace, and 10 engines to 4 furnaces. The buckets containing ore, coke, or flux are picked up, emptied at the top of the furnace, and returned in 1¾ minutes, and only one man to attend to this, there is no one at the top of the furnace. Thus there has to be delivered at one spot, 100 feet above the ground, uninterruptedly, a stream of materials per furnace of over 1,200 tons per 24 hours. That is a problem in handling material which only modern engineering can deal with.

When I visited these furnaces they were producing *600 tons per furnace per day* (24 hours). The metal is tapped into ladles, poured into a 250 ton mixer, taken from there to the Bessemer converter, from converter to soaking pits, thence to blooming mill, rolling mill, and transport car ; all operations with an initial heat from the blast furnace, except occasionally a

little heat is added in the soaking pits, if required. If the metal is not required in the Bessemer department, as on Sundays, or in case of accident, or the supply is greater than the demand, it is run from the ladle into chills, about 2 feet long by 9 inches wide by 3 inches thick; these are automatically conveyed some distance, then through a tank of water, and up an incline upon which cold water is sprayed, and tipped into the railway cars; a ton of cold pig iron is loaded in 11 minutes, and human hands never touch it. Our practice is to run the metal in a sand bed, and as soon as cool enough, to lift the pigs out by hand labour and stack it. With ores yielding 57 to 60 per cent. of metallic iron, the best month's record of these furnaces has been (*i.e.*, each furnace) 17,182 tons, or 572 tons daily, the best week 4,110 tons, and the best day's output 690 tons. Most of the appliances are operated by electricity, and the cost of the plant is enormous, but a very large part of it has been spent in providing appliances for economising labour, and they say it is well spent; but to me it seemed so serious that none but the boldest and most wealthy would be likely to face it.

In England, since 1890, several firms have spent large sums in bringing their plant up to American models, and a few are now working with 9 to 10lbs. blast. I am sorry I cannot give you the exact details of the best English practice, some of the owners being somewhat reluctant to give the full particulars, but in South Wales with modern plant, using ore with 48 to 50 per cent. of metallic iron, the best output is 1,617 tons per week. In Middlesborough using Cleveland ore with 27½ to 32 per cent. of iron, 800 tons per week. Using Rubio ore with 50 per cent. of iron, 1,130 tons per week.

ROLLING MILLS.

The Duquesne Steel Works are on the same huge scale as the blast furnaces. The billet mill has the largest output in the world. The day I called, September 29th, the foreman said he expected

to roll 1,600 tons; the previous day he had bad luck, having been stopped two hours, and engaged on a poor order, two-thirds two inches square, and one-third four inches square, yet in 22 hours he had rolled, cut to length, and put into the railway trucks, 1,411 tons. The best days output (24 hours) is 1,800 tons.

On December 21st, the Duequesne Steel Works eclipsed all previous records in the converting and finishing mills by producing on the day turn 104 heats, and on the night turn 100 heats, making a total of 204 heats in the converting mill in 24 hours, amounting to 1,928 tons of ingots. The finishing mill produced in the same period—day turn 106 heats, and the night turn 99 heats, the output being 1,700 tons. These records are unparalleled in the history of any steel work practice.

Homestead Works. Cover 430 acres, they are building 16 new open hearth furnaces, which will make a total of 34. Also erecting a new billet and a new street rail mill. They employ 5,000 men, but when the new mills are finished, they expect this number to be reduced. In September they worked 26 days, and the output was:—

	Tons.
Open Hearth Department	30,000
Bessemer	36,000
Universal Mill	14,000
Plate Mill	8,500
40in. Blooming Mill	12,000
35in. Finishing Mill rolling 15 to 24in. girders and channels	8,000
33in. Cogging Mill	13,000
33in. Finishing Mill rolling 9 to 12in. girders and channels	7,500
28in. Blooming Mill	16,000
23in. Finishing Mill rolling 4 to 8in. girders, and 4 to 6in. angles	6,500
Merchant Mill	1,300
	152,800

On the 33in. cogging and 40in. blooming mills, blooms are rolled for shipment, whilst the finishing mills are changing rolls for various sections, which explains the relatively higher tonnage on those mills. The 33in. cogging, rolls for both 23 and 33in. finishing mills. The 23in. mill changed 39 sets of rolls during September, each change taking 1½hrs., thus 58½hrs. must be deducted from the 26 days for this mill. The output is marvellous, and is only made possible by the splendid facilities for handling chiefly by electricity.

Carnegie Co. operate the—

Edgar Thompson Furnaces.
Edgar Thompson Steel Works.
Lucy Furnaces.
Duquesnes Furnaces.
Duquesnes Steel Works.
Homestead Steel Works.
Keystone Bridge Works.
Upper Union Mills.
Lower Union Mills.
Beaver Falls Union Mills.
Larimer Coke Works (the largest in the world).
Youghiogheny Coke Works.
Four of the largest Ore mines, and employ 40,000 men.

Oliver's Rolling Mills. The 9in. wire rod mill the day I called had turned out 410 tons of No. 2 wire rods in 24 hours. They very rarely come below this output, and often reach 420 tons. It is really a combination mill, consisting of 18in. roughing train, a 12in. mill, and four 9in. finishing mills, so that four rods are finished and coiled at once. This mill is served by two furnaces each about 45 long, having two pipes along the hearth the full length, they are 3in. diameter, and cold water is forced through them ;

on these the billets are placed and heated, and on a rack behind the furnace a large number of billets are placed and pushed slowly forward by an hydraulic pusher. By the time the billet reaches the door of the furnace it is thoroughly heated, and drops on to live rollers which convey it to the mill. The furnaces are heated by natural gas piped from a well 40 miles away. The billets are 4in. square, and rolled into No. 2 wire rods. I was told the Illinois Steel Co. of Chicago in their mill can roll 3,273 tons of wire rods per week. Best days output 728 tons.

The enormous output of the American rolling mills cannot be equalled in this country. We have no such mills, nor is any one works able to make the steel for anything like the quantity. The large output is on simple straightforward work, and the mills are specially designed and arranged for this class of work. I have written to the best mills in this country, hoping to put their figures before you for comparison, but am sorry I cannot do so. The general reply is: "ours is a jobbing mill, and we frequently roll 8 or 10 different sections in the week, *besides we do not think we could get rid of so large a make, even if we rolled it.*" The inference is, sit down, let the Americans beat us, and get possession of the markets of the world. The best mill in England with which I am acquainted, has on one or two occasions rolled 50 tons of material in an hour on a good order. The proprietor says he thinks it would be capable of rolling 60 tons per hour. The output of this mill does not exceed 3,000 tons per week. In wire rod rolling all the mills in England put together cannot equal the output of the inois Steel Co.

FORGINGS.

Bethlehem Iron and Steel Co., in addition to the a hammers, they had forging presses made by Sir orth & Co., and one of their own make, and can

forge anything equal to this country. They were making of nickel steel, marine cranks, large rings for dynamos, and other forgings. A gun jacket forging, a beautiful job, weighed 86 tons.

WORKSHOPS.

Are they as light, clean, and airy as they might be? Many old shops in cramped situations cannot be airy, and in few places have we the space the Americans have? but they might be light and clean. Brown and Sharpe's Works in America, is a model shop in this respect, plenty of light, walls white with lime wash, floors clean, tools clean, no grease or dirt about, no loose tools, no heap of packing pieces, bolts, &c., littering the floor. Exhaust pipes over all grinding and buffing machines which take away all dust. They have **wash-up rooms** for the men with long troughs which are filled four inches deep with warm water a few minutes before leaving time; there is an arrangement for finishing off with cold water; each man has a locker with soap and towel and goes to his meals quite clean. It makes the men respect themselves, and such men will not have dirty tools and surroundings. Seldom any "wash-up" in this country, and it is not uncommon to see men returning to work from meals with black dirt of a previous session's work on their hands and faces. The cleanest forge I have seen is Platt Bros., Limited, of Oldham, England. It is a treat to see it, and shows what can be done where there is the will.

Latrines.—Many are a disgrace to all concerned and sometimes insanitary. In some shops these places are made as uncomfortable as possible to prevent men wasting time there. Latrines should be as pure, sweet, and as clean as possible, and this again would teach the men to respect themselves and reflect on their work.

Painting Tools.—In England it is generally any colour, all colours, or no colour. In some American shops I found

every tool painted with white enamelled paint, and the maximum capacity of the tool painted on in yellow letters and figures. This may cause some of you to smile, but the employers said it paid, as the men vied with each other in keeping the tools clean.

COMMERCIAL DEPARTMENT.

There is only time to name one point in this department. In old times buyers came to England as the centre of the world's trade, now England must go to the buyer. Many firms have not realised this. Good travellers who are linguists are needed, well versed in French, German, Italian, Spanish, Greek, Russian, Persian, Japanese, and Chinese; equipped by education to mix with the chief personages in foreign countries, to study the requirements of the people, and not try and force the people unduly to agree with our notions; an education on the one hand linguistic, and on the other adapted to take advantage of all opportunities of gaining commercial experience is needed. This opens up a large question, our educational system is at fault. We need more attention to Secondary Education; no adequate provision is made for the middle class who have to be distributors. There are three classes, operative for production, middle class for distribution, masters for management, and each necessary for their particular work, and each must have adequate and fit training. It has to be remembered that before either the tools or the workmen are required, the commercial and practical managers and business originators must be on the scene. The *tools and the workmen will neither make, obtain, or maintain a trade.* In other words, it is to the ›paratively small proportion of men of originality and energy, ›ally and commercially, that the far greater proportion ›or its continued employment. It is the originator we simply mechanics and materials, and it is the that lays broad foundations for general leader-

DRAWING OFFICE.

Why should our draughtsmen work at an horizontal board? This compresses the lungs and stomach and no wonder so many are dyspeptic. The Germans use the vertical drawing board, which obviating any stooping and all unnatural positions of the draughtsman, he can either sit or stand to his work. The board is balanced by a cast iron weight, so that it can easily be raised and lowered by means of a handle fixed below, and thus any part of the drawing can be placed in any desired position for working. In a similar manner it is possible to shift the "tee square," the parallel movement of which by means of weighted cords is so simple and easy that, after many years use, no defect or irregularity in the working has occurred. There is ample provision for supporting the drawing instruments, so that they are always at hand.

"Draughtsmen should remember a drawing should be complete, for a drawing which requires explanation from a draughtsman is no drawing at all. Instead of being a workman's memorandum, such a drawing is simply a draughtsman's memorandum, and if he is not present, the drawing fails in its mission. Drawings for use in the shop should be so complete and self-explaining that they could be sent a thousand miles away without a word of explanation, and enable properly skilled men to execute the work as well as the man who can confer with the man that made the drawing."

TOOLS.

In Forges it will not do now-a-days to work steam hammers at 50lbs. steam pressure, and our competitors work theirs at 100lbs! So in engineering and other workshops, the tools must be of the best, and this entails constant outlay for renewals. Has this been done? Does not this account for the want of success in many of our shops? No better tools can be made than in England, and no better can be produced than in

Manchester and district. Further, many of the so-called improvements in some of the American tools are but reverting to English practice. Still we have something to learn from American tool makers. A noteworthy feature is the pains that have been taken to provide means, so that a man who operates the tool may always stand as close as possible to the cutting tools, and at the same time have at hand the necessary levers, hand wheels, &c. which control all the many motions of which the machine is capable, without moving from his place. In our practice, generally speaking, not nearly so much pains are taken to secure this quality of handiness and convenience of operation, especially in heavy tools. Minor details are better thought out and attended to, even to utilising the framework of a tool for cupboards for storing the change wheels, spanners, even oil can and chalk, so that everything has a place, and is readily accessible; whereas we can provide nothing better than putting the wheels on a spindle, and then often the bottom one is wanted first with consequent loss of time, and "time is money." In particular adaptations the Americans excel us, such as in the use of automatic screwing machines, and in turret lathes as are used in cycle manufacture, consequently the bulk of the tools in the cycle works at Coventry have come from America.

In America the tools are worked to their utmost capacity, in many cases the cutting speed being greater than ours. The finish of their tools is good, and in the heavier tools I noticed a marked improvement, they are making them more massive, more in accordance with English notions.

The tool and other industries of America have had a very bad time the last four years. Agitation as to tariffs, the silver ques-
n, and consequent political disturbances have had disastrous
lts, but the outlook is very encouraging; there is at present
tions of a large business, and they were particularly pleased

with the increase of trade with England. One firm of American agents (C. Churchill & Co.), during a recent period of six months their sales amounted to £125,000. I found large stocks of tools, in one case equal to 12 months output of the firm, and they said there was no need to settle the strike in England as far as tool makers were concerned for the next two years, for with their large stocks, and the shops not working to their full capacity, over and above supplying the needs of their own country, they could supply all that England might want for that period. The opinion of an American tool-maker who has travelled extensively in Europe is, "That it is time England was waking up, for her machine tool business is going away from her fast."

TOOL STEEL.

Many works now use "Mushet" and other self-hardening steels. Where this is used the speed and feed of lathes may safely be increased 25 %. But is it done? The men are against increased output, and as a consequence have often said it is no better than any other steel.

A firm of shipbuilders on the Clyde with "Mushet" steel drills, running at 300 revolutions, drill two holes per minute, $\frac{13}{16}$ in. diameter, through steel plates $1\frac{1}{8}$ in. thick, the drillings coming through so hot that strong paper is burnt when held underneath. They grind the drills three times in twelve hours. A firm at Bolton turn iron shafting 25·5 ft. per minute, turning a shaft 3·25 in. diameter, 22 ft. long, in one hour, turning a 32 ft. rope pulley for forty ropes, $1\frac{1}{2}$ in. diameter, in five days and five nights.

A Glasgow firm finished a shaft 19 ft. long $15\frac{3}{4}$ in. diameter, one coupling, 31 in. by $3\frac{1}{4}$ in., from the rough forging in 30 hours. They also bored a 90 in. cylinder at the rate of $2\frac{1}{8}$ in. per hour straight through without stopping, the cutters being sharp at

the finish. A 96in. cylinder, at the rate of $3\frac{1}{16}$in. per hour, feed 6 cuts. to the inch.

HANDLING MATERIALS.

There are a few shops still in existence that have no better method of handling heavy materials used in engineering construction than rope blocks and hand labour! A few others have the old-fashioned, cumbersome, slow moving jib cranes, which formerly were necessary adjuncts in every machine shop. Others have travelling cranes driven by a square shaft, costly in repairs. Others have the comparatively modern rope crane. Others are adopting electric cranes. In America, the electric crane is used in all the best works, both in the erecting shop, tool shop, and foundry. It was a pleasure to see one electric crane pick up a locomotive and run with it to the other end of the shop at a speed far exceeding any rope crane. A recent paper read before this Institution by Mr. Daniel Adamson, gives full particulars of the power and speeds of electric as compared with rope driven cranes. All works in the front rank will adopt the three-motor electric crane.

LOCOMOTIVES.

There is no engine equal to the British make, either for design, workmanship, or materials, yet we may learn something from America. They do not put any finish on any but working parts, and there are many locos used here in and about collieries, ironworks, ship yards, &c., that would do quite as well a "black job."

Baldwin's Loco works have a capacity of 20 per week, but re slack at present and only making 10. I found the same ve and rush here as in 1890. Wages paid to 3,081 workmen usive of drawing office and official staff) for week ending ıber 18th, average 54s. per week (60 hours) per man. ı's make a good strong engine, designed and made for

their roads and traffic, but I was pleased to see in several things they had adapted English ideas since 1890.

The boilers have holes punched for the rivets, and in the fire box reamered. They prefer steel plates made by the basic process. Baldwin's have adopted electric driving. In the small tool rooms the line shaft is driven by a motor. All the large tools have separate motors. The result they said was quite satisfactory, and in some respects a decided gain.

They had orders from India, Australia, Japan, Africa, and South America.

Electric locos are used in a few works, and seemed to work well.

ELECTRICITY AND ITS APPLIANCES.

In America the use of electricity is far more general than with us. For lighting it is universal. For tram cars the trolly system is invariably used ; it may be somewhat unsightly, but is cheap and effective, the cars run at a great speed, are under perfect control, and every town of any size runs them 6 to 15 miles in several directions. This finds an enormous amount of work for the electrical engineers, and both the Westinghouse Company and General Electric Company have large plants making motors for cars.

Many works have adopted electric driving, some have a motor for each room, others one for each line shaft, some drive the large tools only with a motor, others a motor for almost every machine. At the Duquesnes furnaces there are several electric appliances. At Duquesnes and Homestead Steel Works enormous sums have been spent on the application of electricity. For instance, at the open hearth furnaces you see no materials lying about ; a loco brings up a train load of boxes ready filled with materials to be charged, an electric charger takes hold of these boxes, and puts them in the furnace, turns them half round, brings them back, and deposits them empty on the trucks ; every operation electric, and only one young man to attend to

it; besides him there is a man who superintends, and a labourer to give a hand if necessary, and the boy on the platform who lifts the furnace door by moving the lever which regulates the hydraulic lift. A 50 ton furnace is charged in an almost incredibly short time. They have electric appliances for charging and drawing ingots and blooms, electric live rollers, cranes, bogies, dispensing with human labour to a marvellous degree. To be appreciated it must be seen. We lag behind in Electric Hoists or Elevators, we have not yet developed the tall buildings as they have in the States, and the few high buildings we have are residential flats, and seldom offices or places of business. Even in our large hotels there is an air of luxuriously dignified leisure about the lifts which is exasperating after America.

Electricity is applied in many directions, even to driving a small fan on the dining or drawing room mantelpiece, to create a current of air in their heated rooms. In Georgia there are several cotton mills entirely driven by electricity by motors actuated by generators driven by turbines placed in the river. I fully appreciated the privilege of a thorough inspection of the Niagara Fall Power Works.

GAS ENGINES AND THE TRANSMISSION OF POWER.

Some people are under the mystic influences of the word electricity, and are applying it in many directions without sufficient thought being given to other means of power. A favourite illustration is, the use of electricity in running say a special tool at night for a breakdown job, and thus avoid running the line shafting of the shop. This is undoubtedly good, but ere is needed a boiler, steam engine, dynamo, motor, and an ıdant for the boiler and engine, in addition to the man at chine. In first cost, and in cost of working, would not a e be better? No extra attendant is required, and the uot be more costly than the steam.

I am deeply indebted to Mr. A. R. Bellamy (a member of this Association), of Messrs. J. E. H. Andrew & Co. Ltd., Reddish, for tests which he has made specially to illustrate this part of my address He says: "The engine which drives our shop is one of our modern 'Stockport' Gas Engines, working with fuel gas, and is capable of giving a maximum of 35 brake HP.

The power to drive the engine itself with main belt, 40 ft. long by 9in. wide, running on loose pulley, is 6·2 HP. This would be considered the friction load of the engine.

The power absorbed in driving the following shafting is 8·6 HP, viz.: 532 ft, of line shafting in two long straight lengths, ranging in diameter from 3½ in. to 1¾ in, and with 80 bearings; together with 362 ft. of countershafting, in 73 lengths, with 160 bearings; and 2,000 ft. of belting ranging from 2 in. to 5 in. wide. We have the following tools in constant use, viz.:

4 Flywheel and Pulley Turning Lathes.
3 Crank Lathes.
8 Planing and Shaping Machines.
3 Cylinder Boring Lathes.
9 Drilling Machines.
5 Milling Machines.
4 Capstan Lathes.
33 Lathes, average 10 in. centres.
8 Machines, various.
7 Grinding and Emery Stones.

84

making a total of 84 tools. The actual power absorbed by the tools, working under ordinary conditions, is 14·4 HP. The greatest maximum load that we can put on the engine, that is by starting up some of the heaviest tools altogether, is 22 actual HP. At the same time, we have in our works six machines that we know take about three brake HP engine to drive each of them

under their worst conditions, and we have six others that take 2 HP each.

Summarising the whole matter, our engine takes 6·2 HP to drive itself with the main belt. The whole of the shafting, countershafting and belts, absorb 8·6 HP, and the tools themselves absorb 14·4 HP. Supposing that we were to put in Electric Motors to drive each individual machine, we should have to put in 80 Electric Motors, six of them would have to be not less than 3 brake HP each, and six of them not less than 2 brake HP each, in order to start the machines under certain conditions; and *we should have to drive the whole of these 80 Motors for not more than 8·6 HP, to be equal to what we are doing at the present.* Apart from this, we should have to put down a motor somewhat larger than the actual power required for each machine, so that I am confident instead of saving anything we should loose considerably in friction loss, driving with motors as compared with our present system. I think our own shop is a splendid example of the value of gas engines for driving our class of plant, where such plant is grouped together as we have it."

CAPITAL EXPENDITURE.

Nothing surprised me so much in America as the vast sums spent on their Works, and where the money comes from is a mystery to me. For example, the Carnegie Co. think nothing of spending £100,000 in altering a rolling mill if they see any advantage. The amount spent on the Duquesnes' furnaces and Mills, also the Homestead Works is enormous, and other firms spend in the same proportion. The Westinghouse Co. have erected three very large buildings, and filled them with tools in 12 months, seemingly without any regard to cost. In Bury it would take a lifetime to erect and equip such buildings. The General Electric Co. have a capital expenditure of 50 million dollars. I cannot discuss financial matters and say if such

expenditure pays. But, there are a great many firms in this country will have to spend some money if they do not wish to be "wiped out." Nothing but "up to date" tools and methods will enable us to compete with America. Do not mistake me; I know antiquated tools and old methods are continued in some establishments in which *general engineering work* is carried on, because it will not pay to reject moderately good tools for special ones which will only be required occasionally. Still a large capital expenditure is needed in this country, and expenditure on machines will never strike.

LABOUR.

In American practice there are no such restrictions on piece work as in England. They do not say one shop in a town may have piece work, and another shop in the same town, or in a town a few miles away may not. Each workman as a rule acts on his own initiative, makes his own individual arrangements. So far from any attempt being made to limit the number of tools a mechanic can tend as in England, the American takes as many as he can, knowing the more he does the better will be his remuneration. It is, consequently, not an unusual thing to find an American mechanic tending two, three, four or even half a dozen tools, whilst the Englishman in many cases is *forced by his own organization* to attend only one. An uniform rate of wages, which is a desideratum with a number of British trade unions, would be scoffed at by the American, who insists on earning as much as he can. They say we should apply in every day life the sound and healthy principle that "the race shall be to the swift and the battle to the strong." Surely if this teaches anything, it teaches the lesson of maintaining individual liberty, which the British workmen has voluntarily sacrificed for a "mess of pottage."

From the point of view of international competition at any rate, there can be no possible doubts of the demerits and disad-

vantages of the British system, which is practically a premium on the freer ideas and habits of the American citizen.

American engineers can purchase the materials of construction at a considerably lower range of prices than is possible in this country. This fact would alone place them in an impregnable position, even assuming that all other things were equal. But, so far from all other things being equal, it is one of the most notorious facts bearing upon the comparative industrial situation of the two countries, that American mechanics, partly because of their mechanical equipment, partly because of their greater industry, and partly because of the greater inducements offered to superior capacity, and the absence of restraints on such superiority common in this country; are able to produce man for man a cheaper product than we do in Great Britain.

The *qualitative* superiority of the American may be doubted, but his *quantitative* superiority admits of no doubt, and when this advantage is united to cheaper materials of construction we may feel apprehensive as to the future of our engineering industries from the point of view of international competition.

We have also to compete with that great, well-educated, and enterprising nation Germany, but many people overlook a much more serious competitor the United States. America with her boundless natural resources, coupled with the energy of her people is destined to become the workshop of the world. How soon no one can tell. Whether she is to be thrown back and rent by great social upheavals, such as are now going on around us, or not, we cannot say, but at present she is making rapid strides towards wiping us out. These facts are serious, and call upon us to exercise all our powers in order to enable us to maintain the position which we occupy in the commercial world. The Americans are executing orders which ought to ave come to this country, in iron, steel, tools, electric and r machinery, and orders once lost seldom return. It is

because of her resources and her enterprise, because of the capital they are embarking in the trade, but mainly because of freedom of employing the best machinery, and the best and most economical way of using it.

Still I believe in the British working man, and the majority are right good fellows and cannot be excelled. I believe, too, we have a great advantage in our climate, but we are at present unhinged, and the so called working man is trying to act against fixed principals. He is trying to draw an illogical and impossible line between Capital and Labour. Do as he will there will always be a steady march of men from his ranks to join those of so called Capital. Have we forgotten Stephenson, Telford, Brindley, Murdoch, Faraday, Kay, Arkwright, Maudsley, Roberts, Fairbairn, Nasmyth, Whitworth, and scores of others of our country's illustrious dead? Men whose names are written in history. They crossed the line now attempted to be drawn and multitudes of others are crossing it every day.

The mysterious force of character will compel some men to rise. We cannot remain at one dead level. The tendency to depreciate improved machinery and to limit the output and thus nullify its cheapening influence is also illogical and irrational. If we follow this idea we shall go back to flint and finger nails and the so called "noble savage." Is it not true the better and quicker the machinery and cheaper the output the *greater the demand and volume of trade*? Many ride bicycles nowadays, and even boys wear watches, almost every cottage has its piano, and we possess all kind of things of which our grandfathers never dreamed, and the human appetite is whetted for such comforts and luxuries and will not be easily appeased. There need be no fear of glutting the market if we each do our best to widen and improve it. We can no more stop machinery than we can stop a man eating with a fork instead of his fingers. We had best take to it as our American cousins have done.

I consider the engineer the leading craftsman of the world, and if we will only be true to ourselves and our work, and throw off Socialism with its impossible ideas we may yet do well. Let each man think and act for himself, and this great wind swollen mass of ignorance which at present paralizes our position, will shrivel up and disappear like a burst bubble.

What we want is employer and employed to march henceforth side by side into the great future, which may yet if we "pull together" and "strike while the iron is hot," await this Britain of ours.

VOTE OF THANKS.

Mr. Joseph Nasmith (Ex-President) said: Although one might not agree with all that had been said, it seemed to him that the address was permeated by such a noble spirit, and was inspired by such a regard for facts, that at any rate it was worthy of their best consideration. He ventured especially to say that he cordially agreed with all that had been said as to the use of machinery, and he was pleased that inasmuch as last year in his inaugural address, he took very much the same line as to the use of machinery, that doctrine was enforced as it had been that night by so many pointed examples and facts. The fact was, as the President remarked, that upon the free use of the best appliances which we can get in this country depends to a large extent its future. And if we can only get the men to see it, the more use and the freer use we can make of machinery, the better chance we have of finding employment and leisure for our increasing population. Although he was a great believer in the United States, at the same time he did not despair of this little island of ours. Whether we shall take a back seat among the manufacturing

countries of the world, was a question which could not be readily answered, but of this we might feel assured, that if we can only get the people of the country to be animated with the spirit which underlaid this address, we need not fear for the immediate future. He was sure that everybody who had heard the address would agree with him that it was one of the most thorough they had ever listened to. He had great pleasure in moving that the cordial thanks of the meeting be given to the President for his able and instructive address.

Mr. Farnham Slade in seconding the motion, said the President had been most happy in selecting the subject for his address, which if it could be widely circulated, not only amongst themselves, but amongst those people who were now walking the streets of Manchester, it would have a strong influence upon them; the address was full of facts and figures and no one could dispute or doubt the accuracy of them if they would only consider for a moment whence they emanated. With regard to the different points that appeared in the address, especially those referring to the output in America, the figures although marvellous, he certainly did not dispute for a moment. He seconded the President in his remarks that the English working man was quite equal to any workman in the world, and with regard to American machinery, he felt himself that there was no place that could turn out better tools than Manchester, either for durability or accuracy of working. Certainly the natural resources, and the repetition work gave the American an undoubted advantage over the English people. At the same time, if we had the same facilities, the same quantity of repetition work, and our workmen were relieved of the unreasonable restrictions put upon them by their Unions, he ventured to say that we could turn out as much as any firm in America.

He had pleasure in seconding the vote of thanks.

The motion was put to the meeting by the EX-PRESIDENT (Mr. Nasmith) and carried with acclamation.

The PRESIDENT in briefly acknowledging the resolution, said he was obliged for the hearty vote of thanks accorded to him. It was gratifying to him that he had in some measure come up to their expectations. It would be remembered that some years since they had the German "bogey" trotted out, and it undoubtedly did England good. Now, he could hardly impress upon them how much he was impressed with the enormous output in America, compared particularly with that of his own trade, and if his remarks had any effect in stimulating them to better results, his object would be gained.

In regard to the great industrial struggle now pending, he did not think it would be right for him to ignore it, but he hoped that he had referred to it in such a way as to be acceptable to all concerned.

SOME ENGINEERING APPLIANCES IN MINING.

READ SATURDAY, 29th JANUARY, 1898,

BY

C. M. PERCY, M.I.M.E., F.G.S.

AN EMERGENCY PAPER.

When the celebrated traveller, H. M. Stanley received a telegram in the middle of the night from James Gordon Bennett, the proprietor of the *New York Herald*, instructing Stanley to "Find Livingstone," that distinguished gentleman was probably not more surprised than the present writer, when he received from the President of this Society a communication, also at midnight, asking for a paper which should be read on the 29th of January.

In one respect the result was the same in both cases, namely, the affirmative response was made, but whilst James Gordon Bennett's wishes were completely fulfilled, there is very great doubt as to the success of the venture of your President.

CHOICE OF A SUBJECT.

The President was good enough to say that the writer was at liberty to select his own subject, and that within the range of Mining there ought to be sufficient scope.

He further remarked that in all probability there was a paper on the shelf which would meet the necessities of the case.

The writer has been associated very intimately with Mining, especially as regards its engineering, all his life, and a very large number of papers have been written, and might be written on Mining. But the writer in common with the members of this

Association, does not prepare mining papers beforehand, and having but little leisure, fears that his ability and time, for interesting his audience, are by no means equal to his willingness.

MECHANICAL ENGINEERING IN MINING.

There is no intention to lay down any startling theories, or to propound doctrines opening out an exhaustive discussion, but there are some practical points that may be touched upon in the ordinary way, and be not altogether uninteresting to a representative engineering audience. As to mining itself the writer may hold a somewhat exaggerated view of its importance, but he thinks there will be general agreement, that it is one of the greatest industries, and has a direct bearing on and association with many of our other great national industries.

By the term mining in this paper, is included only coal mining, that being the branch of the industry with which the writer is exclusively identified, and which he thinks has a far higher position in the United Kingdom than all the other divisions of mining combined.

Diamonds are closely connected with South Africa and gold with our possessions on the North American Continent and in other parts of the world, but for the United Kingdom, in the mining arena, coal is both king and emperor.

The industry of coal mining is one in which the mechanical engineer plays an important part in practically every stage of colliery development and working. In boring and sinking and tunneling, and to some extent—certain to increase—in coal getting.

Even in lighting there is a connection with the mechanical engineer, in this way, that the effective mining light of the future will be electricity, and there can be no efficiency in electrical engineering without a capable knowledge of the principles and practice of mechanical engineering.

Also in ventilation, in pumping, and conveyance underground, in raising materials from the mine to the surface, in the dressing of the coal at bank, and in the transmission almost to the uttermost parts of the earth, the mechanical engineer is in evidence.

There are so many directions in which mechanical engineering operates that the mechanical engineer need not necessarily know anything of coal mining, but the mining engineer has a very feeble grasp of his business or profession unless he has considerable knowledge of mechanical engineering.

PAST INFLUENCE OF THE MECHANICAL ENGINEER IN MINING.

The writer thinks it well to make some reference to those branches or sections of the coal mining industry in which the influence beneficially of the mechanical engineer has been most effectively applied.

Steam Generation.—The almost universal motive power at collieries is steam, and the colliery proprietor, in common with his fellow citizens in every great trade and occupation, has had the advantage of improved material and improved design and improved construction of steam boilers; and although not so ready perhaps as owners of other industries to benefit to the full extent, there are now at the majority of the best collieries of the United Kingdom some excellent examples of boiler engineering.

The favourite type is the Lancashire, constructed of steel and about 8 ft. in diameter. Other types have been introduced here and there, but the Lancashire boiler is the almost universal favourite for colliery work, and in the opinion of the writer will take a good deal of beating as regards simplicity, safety, power and efficiency.

Colliery Ropes.—The writer is under the impression that in the membership of this Association there are not only engineers

eminent in the production of machinery, but engineers of equal eminence in the production of engineering materials.

To such, a good deal is owing for the very striking advance made with regard to ropes, which are not only essential in the matter of conveyance in the mine, but upon them depend the operations in the pit shafts, the raising of the hundreds of millions of tons of material each year, and the raising and lowering each day of the hundreds of thousands of underground workers.

The increased depths and increased loads necessitated a material which should possess the maximum of strength with the minimum of size, and thanks to the iron and steel makers, the material now used for the higher quality of ropes possesses a tensile strength reaching 120 tons on the square inch. The importance of improved quality giving greater strength with less weight is evident from the fact that deep mining would have been impossible under the old arrangements, because a very moderate depth would have been the limit at which ropes would have safely carried their own weight without any other load.

Conveyance in the Mine.—In the old days the coal was carried from the working places to the pit bottom, and later the operation was performed in hutches or baskets drawn by human beings and animals.

It was evident that as quantity increased and distance extended in every direction, only a mechanical system would answer.

The hauling engines in themselves are not materially different from ordinary engines, but the arrangements for enclosing a mine almost with a net work of main ropes and branch ropes, and friction gearing and rollers and pulleys, as now operating in the best collieries is a tribute to the skill and adaptability of our mechanical engineers. Practically, the entire mine is

associated with one centre of power, and the whole system works with almost clock-work perfection, and any one or more parts of the system easily and quickly connected with or disconnected from the rest.

Pumping.—Engineering in the early days was chiefly directed to pumping operations connected with mines, and one is rather startled yet with the records of the high efficiency of those mining pumping engines of the last century. There is no doubt, however, that they did work economically.

Perhaps the special improvement of modern times is that the cumbersome and inconveniently situated surface pumping engine has been removed, and the practice is becoming general of stationing the pumping engine at the foot of the column where the water is made, and not at the top of the column where it is delivered.

Winding Machinery.—In this direction there has been increase in power and in quickness of action, and in this respect few better examples of really good mechanical engineering need be desired than a pair of modern winding engines raising great loads from considerable depths at high speeds at modern collieries.

We now with far greater safety raise tons of coal at one time at a speed of a mile a minute, than we dealt with half a century ago a load of a few hundred-weights, at a fraction of the speed.

Safety in Winding.—A very long time ago colliery owners recognised that they were liable to accidents from breakage of ropes, and appliances known as safety cages were introduced, which, if the rope broke, gripped the guides and prevented the cage falling down the shaft. The writer never cared very much for this appliance, because it did not prevent the rope from falling on to the cage and did not prevent the engines running away. A very general introduction of wire conductors in place

of wood and the high speeds already referred to made the safety cages eventually inapplicable.

The best system in connection with colliery ropes is to make the ropes of material which will not break, and thanks to the iron and steel makers such material is now available. The modern safety appliances which mechanical engineers have introduced, are those which check and stop the engines when from any cause the engineman does not do so. The writer is not referring simply to detaching hooks but to apparatus which shut off the steam and apply the brakes and stop the machinery. At the moment of writing, intelligence comes of an accident with a winding rope on the Continent, sacrificing fifteen lives. The writer still holds that colliery ropes need not break; and if properly made of proper material, and worked with correct factor of safety, on proper applianees, will not break.

Ventilation.—The writer is of opinion that the greatest success in connection with colliery work has attended the endeavours of the mechanical engineer in association with the production of the large volumes of air that have to be continuously passing through a mine.

Little notice is taken when figures are given, speaking of a volume of air equal to a quarter of a million cubic feet per minute passing through one mine, and it may impress itself more strongly by putting it in this way.

Taking an average colliery as employing 500 workers underground and allowing a volume of air per minute at the rate of 500 cubic feet for each individual; this represents an actual weight of air passing through such a mine of 500 tons an hour, and it may come as a surprise that the weight of air passing through a coal mine and coal mines is enormously in excess of the total weight of coal, and water and dirt and everything else raised. The weight of air each year for each individual worker reaches thousands of tons.

In the very early days falling water was used to produce a small current of air; then came the steam jet, on the same principle as the locomotive blast, afterwards came the furnace.

So late as the fifties of this century, when mining endeavours had been made to introduce machinery for ventilation, two men of such eminence as the late Sir William Fairbairn and the late Mr. Nicholas Wood, publicly stated that they had no hope of any machine passing so large a quantity as a quarter of a million of cubic feet per minute through a mine.

At the present time ventilating machines made in the county of Lancashire are producing double that quantity, and there is no reason why a single machine should not, if necessary, accomplish a volume of a million cubic feet of air a minute and continue to do so for any period, always provided that the air passages for the mine are of sufficient area, which can easily be determined, the capability of the machine being practically unlimited.

Dressing and Loading Coal.—Until comparatively recent times, coal after being raised to bank was tumbled into wagons, and boats, and carts, without any attempt at dressing, and with no endeavour to prevent waste by breakage.

But latterly the coal at bank receives a very great deal of attention, and the mechanical engineer has found a useful outlet for his skill and genius. The value of coal does not depend so much upon its size if clean, and the objection to small coal was that it was always dirty.

By a sufficient amount of picking and screening and dividing, and if carried out to the full extent by washing, the whole of the dirt can be removed, and all the coal being clean is saleable. Care in the loading also avoids needless breakage, and saves waste in that direction.

LINES FOR FURTHER IMPROVEMENTS.

The writer thinks that the foregoing notes show very conclusively that the mechanical engineer during the last few generations has directed a good deal of skill, and devoted a good deal of time to matters appertaining to mining, and that very successful results have been attained.

Heavy Coal Consumption for Colliery Machinery.—That success ought to justify and does justify an even increased effort, and there is probably no great industry in which steam is the motive power that still consumes so much coal in the production of that motive power in proportion to the mechanical work done as mining.

The annual production of coal may be taken in round numbers, 200 million tons for the United Kingdom; and practically the average depth that the coal has to be raised does not exceed 1,500 feet; but, to make the argument as fair as possible, the average depth from which all the coal in the United Kingdom has to be raised is taken as 1,800 feet.

The amount and the depth having been taken as fixed quantities, we proceed to determine the power which ought to reasonably be expended in the raising.

There are no exact figures covering the entire industry, showing the proportion of the production of the coal which is consumed on the collieries, and a fair guide is that based upon considerable experience of important collieries.

The average percentage of consumption is not less than five, that is to say in producing 200 million tons of coal not less than 10 million tons are consumed at the collieries in the various operations, which have been set out in a previous part of this paper.

It will be readily understood that the greatest demand is made for the winding machinery, upon which the responsibility ·sts of raising the 200 million tons in a year, from the assumed

depth of 1,800 feet. This means that for the winding operations alone not less than one half, or five million tons of coal a year are consumed.

Taking 250 working days in a year and allowing for short days in one district and double shifts in another district, a general average of ten hours winding each working day, we get for a year 2,500 working or winding hours and representing 80,000 tons of coal raised in an hour from the assumed average depth of 1,800 feet.

Bringing this first into pounds and then into units of mechanical work by multiplying the total weight in pounds by the average depth in feet, we get approximately 323 thousand million units of mechanical work performed in one hour.

The ordinary modern steam engine as used in our mills and other establishments, will yield a million units of work for every pound of coal consumed in the production of the steam. On these lines the consumption of coal in the generation of steam for colliery winding operations would be about 323,000 pounds, equal about 144 tons to raise the 80,000 tons. But the 2½ per cent. of the production which is now so used represents 2,000 tons.

It may be said that the colliery winding engines have to raise and lower the 600,000 workers each day, and to send into the mine and to bring out of the mine a considerable amount of material other than coal, but if we add as much to the 144 tons as makes it 200, being nearly one half, the consumption of coal is still ten times as great as the products of our good modern steam engines.

Winding Appliances.—The writer is perfectly well aware that colliery winding is a peculiar operation in which anything more than moderate efficiency is impossible.

Each operation occupies less than a minute and comprises first the starting from rest, and accelerating it may be to sixty

miles an hour; second, running at a uniform speed it may be of sixty miles an hour; third, falling away to rest again.

But there is no justification for great cylinders, 30 and 36 and even 48 inches in diameter, throwing into the atmosphere at the end of each stroke steam at the same pressure that it is received at the beginning of the stroke.

And there is no justification for winding appliances being so designed that the whole weight of one rope, which is often greater than the weight of coal, is added to the load, which the engines have to contend with at the commencement of each winding.

Surely by means of tail ropes, although not much in favour or a spiral drum, which ought to be in favour, the load should have some approximation to uniformity during a winding.

And the system of simply running high pressure steam through the cylinders and exhausting with practically no expansion and without condensation is good ground for attack. The five million tons of coal consumed each year for steam generation in colliery winding represents a money value of one million sterling, and it does appear that such an item, according to the preceding argument, is open to considerable economy.

And, as years go on, the available coal will have to be raised from greater depths. Commercial success will depend largely on economic winding.

Haulage and Pumping.—Many of the pumping engines now used at collieries will compare favourably in the matter of economy with pumping engines elsewhere, and the writer does not know that any specially new departure is necessary to place at the disposal of colliery authorities really excellent and economical pumping machinery.

A new kind of valve, new to the writer because he has never seen it, known as the "Riedler" is coming to us from the Continent, and does appear to have some advantage.

The valves of the pump are nicely adjusted by springs, and instantaneous and definite opening and closing are secured by mechanical action. Such an arrangement commends itself to colliery authorities as enabling quick action, and giving greater delivery by a smaller pump.

Haulage systems, even as at present, are very excellent, except that the limit of distance is too soon reached, and compressed air conveyed to engines far in the mine is costly.

Hauling engines are rarely made compound or condensing.

They ought to be both, and when electrical transmission has been made absolutely safe, power should be transmitted to distant points of the mine electrically in preference to compressed air.

Take the case of coal under the sea, which we know to exist on the west and also on the east, and hope that it may be proved in the south.

This coal may extend for many miles, and pit-shafts are not desirable in the sea itself. Electrical transmission would enable us to transmit the power to engines located at certain distances. Coal, several yards in thickness, is now being worked at a distance of three miles off the coast of Cumberland, and is believed to extend to a very much greater distance.

Ventilation.—The writer is of opinion that no very great improvement can be expected on the best of our present ventilating plant.

The compound condensing engines now in use give an efficiency equal to that of good engines in other industries, and the power is well transmitted to the ventilating machine by rope gearing. The ventilating machines are practically all of the centrifugal class in three divisions, namely:—

(*a*) The open running which can hardly avoid throwing energy away in the discharged air that may leave the machine at a high volocity; (*b*) The machine surrounded by a

closed casing except at the bottom where the air is delivered into the enlarging chimney; (*c*) the machine surrounded with a spiral casing thus affording an easy outlet all round the machine, and still ensuring the conversion of the energy of motion by reduction of velocity, would appear to be almost a perfect appliance. So excellent are the best of these modern ventilating machines, that they appear capable of working continuously for many years, without any stoppage whatever; they enable with the greatest ease either a uniformity of work, or a rapid change in the volume.

They also perform the work with only a fraction of the coal consumed by a furnace. Mechanical engineers may well ask for the general adoption of this class of machinery in which they excel, and which is capable of saving money to the colliery owners every day. Profit in the coal trade so largely depends on economies effected. The mining engineer must enable the air to get to the machine by providing airways of sufficient area.

Coal Cutting Machines.—The writer does not presume to say much on this branch of the subject.

His experience of coal cutting machinery was greater a quarter of a century ago than now, and although there has been some forward movement, the application of coal cutting machines is still proportionately very small.

In very many cases coal cutting machines could do good work, not so much in the direction of diminishing the actual cost of production, but by increasing the value of the product in lessening the waste. The pick of the collier is a very handy appliance and is not likely to become an absolute relic of the past, and although in the hands of an expert workman does good service, it is wasteful. What with shattering by high explosives crushing with the pick, nearly one half of the coal is sent to as slack.

The difficulty has been in the application of a suitable and convenient power, and the remedy seems to be electricity, by which the machine can be put to work anywhere, and this power transmitted by a simple wire.

But the question that has to be satisfactorily answered seems to be :—Is electricity advanced to such an extent that it can transmit power safely throughout the coal mines of the United Kingdom ?

If it is and when it is, coal cutting machines are likely to come into extensive use.

The tendency of the age, with which the writer is in full sympathy, is to abolish open lights and flame and other tendencies to explosive dangers. The sparks from which electrical appliances are not as yet entirely free will scarcely be welcome in coal mines from which open lights and flaming explosives are being removed.

CONCLUSION.

The writer offers no apology for the paper; it has been prepared by no desire of his own, but simply to oblige a personal friend in the President.

There has been little time for its preparation, but had the notice been longer there would possibly have been no great difference, because even in these agitation days for diminished hours of labour the writer's usual daily average is about sixteen, for the discharge of duties which cannot be delegated to anyone else.

The President is quite able to be responsible for the shortcomings of the paper, evident as they are in every paragraph, and no doubt the Association of eminent level headed men will receive in kindly fashion what has been presented in friendship and goodwill.

DISCUSSION.

Mr. Samuel Boswell said many of the members would remember a paper was read before the Association in 1885 on "Boiler Explosions," when a tabulated list showed a large percentage of explosions was at collieries. But now all this was being altered, thanks to the author of the paper and his brother advisers in colliery matters.

In years past owners of collieries had laid down boilers more or less dangerous, partly on account of low first cost, and partly on account of their ability to burn almost unknown quantities of what was then considered refuse fuel. With a better knowledge of combustion, and experience in the different systems of forced or assisted draughts, this so-called refuse has now a marketable commodity. The labours of Mr. Percy and others had clearly demonstrated to their clients that before they could raise coal from the pit they must burn coal at the top, and to do this with advantage more modern appliances must be used than in the past. Hence those noble ranges of safe, modern, high-class boilers are now to be seen where dangerous externally fired, egg-ended boilers had previously been at work, and it was pleasing to know that economy had followed in the wake of safety. It was doubtful whether any section of engineering held so many lives in its hands as the mining section, and not only the thanks of the members were due to Mr. Percy for his paper, but those of the public also were due to him and his fellow-workers for the great diminution in the fatal list as compared with the past. Personally, he was well pleased with the paper.

Mr. Henry Hodgson said colliery proprietors could obtain better appliances if they were prepared to pay for them. There

was no reason in the world why compound engines should not be applied to mining much more largely than they actually were. Of course, there were compound pumping engines, as for instance, those of the Worthington triple expansion type, but he referred to winding and other engines. Another addition to the winding engines that might be made with advantage was to make them condensing. It was of very little benefit using compound steam in non-condensing engines. Of course, with a condensing plant the main thing would be to have a vacuum to start with. It was just at the moment of starting an engine that the power was required, and an engine that could start with a vacuum was in a much better position to make a good initial effort than one which had to form its vacuum. He should suggest that the surface condenser was the one required for winding engines. Surface condensers properly made, with metallic packings to the piston rods, &c., would hold their vacuum to the extent of 15 inches for an hour.

As to steel ropes, he thought that by the use of nickel steel the tensile strength of 120 tons, obtained with plough steel might be exceeded, as it was generally admitted to be considerably stronger than the ordinary steel. The best rope made, however, would wear out in time, and it would be unfortunate for any colliery proprietor to find out the length of time a rope would last, by experience. At the same time colliery owners did not like taking a rope off before it was finished, but how could the proper time to take it off be ascertained? The question of safety appliances came in here. He thought it possible to make a safety appliance that would grip a wire rope guide, and would hold it in position. At the same time it would not be wise to bring it into operation too often.

For hauling, no doubt electric traction would be more suitable, providing electricity could be used in a fiery mine with absolute safety. It only needed one spark to set up a colliery

explosion. As to the dynamos, of course they could be made absolutely safe.

The author had referred to the economical working of the old pumping engines. Expansion was in those days carried to a very high degree, perhaps nearly as far as it was to-day. If, however, we now attempted to expand all the steam in a single cylinder, we should fare badly, but in the old days they always took care to keep the steam very warm, and superheating had very much the effect of increasing the expansion. That was in a large measure the cause of the economical working of the old engines.

Mr. W. Ingham said his attention had been particularly directed during the past twelve months to points touched upon by the author in connection with the uneconomical working of colliery engines. The figures given quite confirmed his own impression as to the great field there was for economy at collieries. He had been to many collieries where efforts had been made to meet the difficulty. At Clifton and Kersley Coal Co., near Manchester, they were condensing steam from a number of their engines with both ejector and evaporative condensers, and not only did they get a great many more "winds," but they managed to start their engines with a "vacuum." Not very long ago he had seen an ejector condenser at the Irwell Forge, by which a vacuum of 28 in. could be obtained before the engine started. He had also seen, at Bickershaw, ejector condensers applied both to winding and hauling engines, and they were working with a vacuum of 26 inches from the start. At a colliery near Oldham there was an evaporative condenser in use, by which they could run half an hour with a vacuum after the air-pump had stopped working.

s to ropes, in some cases—not, perhaps, colliery ropes—they ated inside first. He did not know whether the colliery

ropes gave indications of deterioration, but if not, appliances for safety ought still to be considered.

The knowledge of mechanical engineering possessed by present-day mining engineers, led them to expect that in the near future colliery engines would be worked almost as economically as mill engines, and be almost invariably condensing.

Mr. T. Daniels said he would like to know whether nickel steel ropes would last longer, with the bending and unbending which ropes had to undergo.

Now that boilers were made so much more efficient and cheaper, colliery owners would go in for better boilers than formerly they used to obtain; also, probably, a better winding engine.

Mr. J. E. Kelsall said nickel steel was no doubt an improvement upon the ordinary steel for ductility and tensile strength, but he might mention in executing an order for the French Government some time ago, in which a steel of high tensile strength was specified, his firm, although recommended to adopt nickel steel, did not do so, but made experiments by which they produced a steel quite as strong as the nickel steel, and superior in other respects.

There was no doubt that it was the bending and winding and unwinding of a rope that caused the strain. He thought that if a steel rope was carefully used and examined, any defect might be readily detected.

Mr. E. G. Constantine asked the author what experience he had had of the use of governors on winding and hauling engines, to prevent them running away; also what the present practice amounted to in the use of piston valves in hauling and winding engines.

Mr. G. P. Gass, jun., referred to a new hydraulic apparatus that was being introduced for breaking down coal in mines, instead of using explosives. This apparatus did away with any liability to explosion or accidents in bringing down the coal, which was, in addition, brought down in a better condition.

Mr. F. W. Reed said his experience with wire ropes was that they gave out first on the outside. There was more stress on the outer strands than on the inner ones, so far at any rate as crane-ropes were concerned. He thought that if a rope broke and caused a load to fall, there was negligence on the part of those in charge; this was so with crane ropes, and no doubt the same remark applied to colliery winding-ropes. If the ropes were properly examined, he did not think there would be any accidents through their breakage.

Mr. Matthew Ingram said he was sorry to hear from the author that no great improvement could be expected in ventilating plant. He did not think perfection had been reached in this direction, nor that it would be until there was an absence of fatal accidents in coal mines by reason of bad or defective ventilation.

He also thought many accidents were due to carelessness on the part of the miners. There should be a system of management and direction which would meet this and prevent it.

Mr. J. Bolas said although they should aim at perfection in every branch of work, they could have economy at too great a cost, and if they put down a very expensive plant, the depreciation, friction, &c., might swallow up all the economy. Then, too, it must be remembered that the conditions of working of winding-engines were quite different from that of mill engines. The winding-engine with the conical drum was in

use and was the proper thing, and appliances were attached to it whereby accidents through running away were obviated.

Mr. G. H. Sowter said he would like to know the author's experience with regard to the balanced valves as used on winding engines of the present day. He believed they were now considered the correct thing, both as regards the easy handling of the engines, and also for economy of steam.

Some of the members seemed to think that compounding and condensing in colliery machinery was rather rare, but anyone conversant with the great coalfields of South Wales, North Wales, Yorkshire, &c., would find that the above principles were applied not only to air-compressing, but also to the engines actuating the ventilating machinery.

Mr. Henry Bates said he had never seen a colliery rope that had broken in the mine; the ropes were usually detected by examination before that point was reached, and generally it could be traced where the breakage commenced.

Screening had come very much into use in collieries. One mine he knew of, and which had a few years ago been unable to sell part of their coal, were now screening it, and making some thousands of pounds out of the class of coal which they at one time had to throw on the pit-banks.

Mr. Percy, in reply, stated with regard to ventilation, he had not said, and had never intended to say, that the system of ventilation at the collleries in this country had reached perfection. He had said that the ventilating plant at the disposal of colliery owners was such that he scarcely saw where very great improvement was to come in. As to the effect of these ventilating appliances upon explosions, he might say that there was no difficulty at present as to the quantity of air available

for the mine. Mechanical engineers could place at the disposal of colliery owners machinery capable of sending any volume of air into the mine; and in more than one case the explosion itself had been directly traced to the fact, not of too little, but of too much ventilation. The old system of lighting mines required that for the safety of the lamps used, the current of air should not exceed a certain velocity, and appliances for lighting that were safe with a low velocity of ventilation were not so with a high velocity. Collieries could be made safe from explosions if they removed all open lights from the mines, adopted lamps entitled to the term "safety" in rapid currents, and used no explosive that gave off flame. In his opinion the ventilating appliance that gave most successful results was the centrifugal fan with spiral casing. He was glad to know that the system of having mammoth fans, that came into operation a generation ago, was passing away, and that people had come to realise that the water gauge that produced the ventilating pressure depended not upon the size of the fan, but upon the speed of the circumference—*i.e.*, that by working a small fan at high speed they got the same gauge as with a large fan at a lower speed. He had seen a fan with spiral casing 30ft. diameter, which was intended to produce a volume of 500,000 cubic feet per minute, against a 6in. water gauge. There was not the slightest necessity at any colliery in the Kingdom, for applying any fan larger in diameter than that he had mentioned.

His argument *re* winding engines was that if they could not obtain the same efficiency as in a mill engine, there was no necessity to use ten times as much coal in the former as compared with the latter. Surely there was some half-way house.

As to ropes, he did not think very much hung upon the bending and unbending of a rope upon its drum or pulley. If

they had a bad pulley or drum, they were doing the rope a great deal of harm, but he thought that with the sizes of winding-drums, and of pulleys that were in use, the ropes received no more harm in working round them, than they would if they were not working round a circle at all. The pulleys should, however, be absolutely round, and the drums properly made. Where ropes received injury in use, it was due to the appliances being badly made, and also to the ropes being over-loaded, a serious error. It was very difficult to say where a rope generally gave way first. Some ropes gave way from the interior, and the defect could not be seen, whereas others gave way from the outside, and the giving way was visible. A class of rope had, however, been introduced by which nothing could get inside to do it harm, whilst it was the most flexible of any rope made, and did not show the slightest tendency to twist. So far as ropes were concerned, thanks to the iron and steel makers of the United Kingdom, material was available that would last for half a generation, if colliery owners had only wisdom to use it.

In the construction of a rope there was a very large number of wires too often varying in strength and ductility, and it would be a good idea to have records kept of tests of all the wires of which ropes on which lives of men depended were made. Everything that colliery owners wanted in connection with ropes, materials, engines, and other appliances, was already at their disposal, if they would avail themselves of it.

As to safety cages he might say that safety appliances should be really safety appliances, or else they might become death-traps. The danger with safety cages was that, with their high speeds they might come into action when they should not, and cause that which they were intended to prevent. These safety cages were, a generation ago, made compulsory in Germany at all the mines. It was, however, found that they caused more

accidents than they prevented, and the compulsory provision had been withdrawn. Then again, even when a safety cage acted properly, it did not prevent accident—it simply held the detached cage. If they had, as they could have, ropes that would not break they would have no accidents at all.

As to piston valves, there were probably some in use in connection with winding engines, but personally, he did not know of any. Whatever valves were used winding engines should be easy to handle, even with full pressure of steam on. With regard to governors he knew of some attached to winding engines in the Manchester district, to which the automatic expansion gear was applied; the automatic expansion came into operation only when the speed got up.

With respect to alleged carelessness amongst the mine workers, he was bound to say that in Lancashire he did not know of accidents, to any extent, which could be traced to the carelessness of the miners. On the whole the Lancashire miners were intelligent, and endeavoured to assist the managers and employers in any measures taken for the safety of the industry.

Mr. H. Hodgson moved a vote of thanks to the author for his excellent paper, in which he said a number of valuable hints had been thrown out.

Mr. J. Walthew seconded, and Mr. Webb supported the motion, which was unanimously carried.

Mr. Percy, in responding, said if we did not get coal in England, we should get it from somewhere else, and he had not the slightest doubt that even at the present time coal could be sent into this country at a less cost than that at which it was being produced at many of our Lancashire collieries. Some

half century hence, the coal would have to be raised from much increased depth, and unless something was done in the direction of economy, the expense of getting it would be so great that commercial success would be impossible, and coal mining as an industry would cease to exist. At present it found employment for 700,000 people, upon whom 2½ or 3 millions of a population depended, and anything that could be done to prevent the down grade of such an industry ought not to be neglected.

THE BALANCING OF ENGINES.

READ SATURDAY, FEBRUARY 26TH, 1898,

BY

Mr. JAMES WHITCHER, A.INST.E.E.

Within the last decade the problem of engine balancing has taken a prominent place in the programme of engineering politics. The demand for higher piston speed in engines for marine and electrical work has forced it much to the front, so that the scope of interest in it, instead of being practically limited to locomotive circles, is extended over almost the whole art of motor engineering. The subject has already a considerable history; for the closing years of the century that has witnessed the triumph of the engineering instinct, have brought some eminent and practical men to its study; and it is inevitable that the practice of the coming one will bear the impress of their thought.

But, in an intellectual feast of this kind, one wants to avoid too much dishing up of history, however recently made: There is always a certain hunger for fresh ideas to be satisfied if the banquet is to be generally enjoyed. I have, therefore, resolved rather to treat of the subject in an exploratory manner, than to expound only the views of others, with which no doubt most of you, as eager students of progress, become acquainted as soon as publicly expressed.

I have found it difficult material to form into a paper for public discussion; and on that account I hope you will excuse all shortcomings. It is essentially a question of mathematics: and as you are aware, the language of mathematics is confusing

and tiresome to talk, and yet more confusing and tiresome to listen to. At all costs I have striven to eliminate the algebra; so that, if at times, I appear a little too general or dogmatic, you will understand the reason.

The whole science of balancing is founded on one small axiom in dynamics, which I may state thus:—"No motion of mass can occur without a compensating motion of mass in an opposite direction so that the common centre of gravity shall remain undisturbed." Which is as much as to say that there can be no absolute translation in space of mass in the aggregate: but simply interchange of position governed by the law of one immovable centre of gravity. A small axiom in truth, but one of dazzling scope for it practically propounds the stability of the universe.

Now for a homely illustration, just to see what this means. Suppose I were to walk across this room, and that I have a perfectly rigid Earth under my feet. Then it is an inevitable consequence of my walk that I should sway the earth to a compensating amount in the opposite direction. The effect is infinitesimal, of course, because of the huge difference between my mass and that of the earth, but real notwithstanding. One never knows what a real power he is in the world till he realises this little fact.

Coming now to the case of a simple reciprocating engine, for instance a direct-acting steam pump, we have in the operation of it, the mass of the pistons and attachments vibrating regularly to and fro. Imagine the pump to be quite free in space: then in accord with the above axiom, it must oscillate likewise, and in time with the piston oscillations, but oppositely in direction. The amplitude, relative to a fixed point in space, of the oscillations of the pump frame, must, furthermore, be to that of the piston oscillations as the mass of the pistons is to mass of the frame. By bolting the pump down to a found-

ation we can restrict the counter oscillation: but by no means can it be entirely constrained. The amplitude merely is reduced; for the fixing is simply the mathematical equivalent of adding the mass of the foundation to that of the pump frame and thereby diminishing its oscillation in proportion.

Hence we perceive that in a broad sense there can be no such thing as an unbalanced engine, for an engine, which is not balanced in itself, will straightway compel any mass to which it is anchored, to perform this duty for it. In the narrow mechanical sense we define a balanced engine as one in which vibratory motion of the frame is non-existent:—An unbalanced engine as one in which there are frame vibrations which although capable of reduction to infinitesimal dimensions by fixing to massive foundations can never be completely suppressed. In other words, one balances its motions in response to the will of its designer; the other by its own strong will in the way that comes best to it.

Still design can have a say in the latter case also; for suitable planning of the foundations brings the independent will of an unbalanced engine somewhat under control so that the operation of its "automatic balancing" can be guided into safe ways. Solid foundations, well bonded together by the holding down bolts, and of suitable weight will ensure the reduction of the vibration to amplitude innocuous to the steam pipe and other connections. And isolating the foundations from walls and footings, to a great extent, guards against destructive effects on the buildings, which satisfies requirements of many cases. The magnitude of the vibratory effects exerted by a single crank engine upon its foundations is easily calculated. For instance, assume that a horizontal engine of 10 inch stroke, has piston and attachments weighing 100lbs, and is mounted on foundations which together with the engine make up a total weight of 10,000lbs. Also suppose for the moment that the C.G. of the latter mass is raised

into line with the cylinder axis. Then the vibration amplitude or stroke will be $\frac{1}{10}$in.; for $\frac{1}{10}$in. : 10in, : : 100lbs. : 10,000lbs. Since the C.G. cannot practically be in line with the cylinder axis, a tilting action will be produced which may be estimated by means of diagrams: and it must be remembered that movements are magnified at points the farther removed from the axis of tilting.

We assume in the above that the foundation is free from its surroundings and where the vibrating forces are horizontal, this is practically the case for every foundation not bonded to rock or walls (which become in such event part of it.) For it is evident the foundation block will free itself at the sides; and for such small movements, the friction upon the supporting soil is little or nothing. The tilting action adds vertical components to the motion, which do not isolate themselves from surroundings so readily. Yet in sand or gravel soils, the block will be almost as free as in the former case, for the rocking motion tends simply to shear the soil in cylindrical or spherical surfaces concentric with the centre of rocking. Therefore, in designing foundations for engines unbalanced in the horizontal plane, it is only safe to assume that the sole restraint on the vibrations is the mass in solid and rigid connection with the engine frame.

Now vertical vibrations do not become thus isolated from surrounding masses; because gravity keeps the foundation in compressed contact with the ground supporting it. Therefore, more or less of the sublying ground must become involved in the movements. Here we arrive beyond the power of exact investigation: we cannot say to what extent the amplitude of the foundation vibrations may be reduced by the further mass involved. If the subsoil were absolutely without resilience the foundation would sink deeper at each stroke: but of course it has some resilience and if, in good measure, we do not find the

vibrations much diminished. I can explain this better by bringing on another section of my subject.

At the British Association meeting of last year, Mr. J. Swinburne read a paper advocating the "Mounting of Machinery on Springs." In a letter to "Engineering," I opposed the suggestion on theoretical and practical grounds. My practical objections were just enough; but my theory was wrong, absurdly so in fact: and I am glad of the opportunity to rectify the error. I contended that it was impossible to isolate vertical vibrations by springs or otherwise, alleging that the reaction of the springs on their supports would equal the force acting upon them. Which is quite true: but I overlooked the fact that the original force tends to vanish as the engine frame is allowed freedom to move. Thus the spring reaction is simply proportional to the extent by which the springs restrain the movement. If the springs be of long range the reaction is comparatively small. For instance, suppose we have a single vertical engine of 10in. stroke, reciprocating parts weighing 100lbs., and the bed loaded up to 10,000lbs. total, and supported on springs which compress 1in. for every 1,000lbs. imposed. They would be compressed 10in.; and with a movement of $\frac{1}{10}$in. which is enough to complete the balance, the spring reaction would vary only from 9,950lbs. to 10,050lbs. With springs of very short range, say sheets of indiarubber requiring 100,000lbs. to compress them 1in., we approach ordinary conditions with foundation resting direct on ground. The spring reaction varies then from 5,000 to 15,000lbs. assuming the support remains immovable.

Here we have a clear illustration of the effect of a resilient sub-basis for foundations. Sometimes, although not often, fortunately, we are brought to face the problem of isolating vibrations caused by unbalanced engines from adjacent property. From the foregoing we perceive that the most promising

procedure is to make our foundations as heavy and solid as can be, carefully isolated, and borne on a deep sub-bed of faggots or the like. Then if the sub-bed is well drained the trouble ought to be scotched: but if the foundations become partially water-borne the transmission of vibration is as liable as not to be greatly facilitated.

There is a perplexing phenomenon occuring sometimes in connection with the transmission of such vibrations. It is found that in the aggregate immense mass is being vibrated in an appreciable manner, although the originating cause is comparatively small. The explanation is that the transmission is by wave motion. A complete system of waves is a balanced mechanism in itself, since the sum of the momenta having regard to direction is nil: therefore, the disturbance may be spread through immense masses, without much restraint being exerted on the source vibrations.

For this reason, in situations favorable to wave transmission, vibration may become very troublesome indeed. This is the case in ships, where it sometimes happens that the natural vibration periods of the hull, are in agreement with the vibrations set up by the unbalanced engines at the working speed. For example, if the ship were perfectly rigid the whole mass would be moved simultaneously by the engine vibrations: therefore, supposing for the sake of clearness, the engine is a single one, the stroke or amplitude of the vibration: the stroke of engine: the mass of the piston: the whole mass of the ship. However, as the hull is not so rigid, the vibration travels from the engine forward to the stem, and backward to the stern. Thus wave motion is propagated through the structure; and if the ship's length be the equal or a multiple of the wave length, e vibratory momenta of the ship's mass balance themselves; nly the momentum of the engine frame remains to balance piston, therefore the vibrations are greatly augu-

mented in amplitude, compared with the case of a rigid hull, and in less degree with one where the wave length is not a submultiple of the ship's length. In the latter event part only of the momentum of the hull assists in balancing the piston momentum.

I must proceed now to what is perhaps the most important section of my subject:—the effect of the balancing effort upon the bearing pressures on the journals and slides. It is so at least from the point of view of the engine designer: for it is one of the most formidable obstacles in the way of continued response to the call for higher speeds. I think you will agree with me that the most weighty consideration we have before us to-night, is the question whether we cannot by balancing our engines improve the working conditions of the bearing surfaces.

Consider the case of a single engine. At commencement of stroke the inertia pressure of reciprocating weights, opposes the steam pressure, and consequently the pressure transmitted to main bearings, through the connecting rod and crank pin, is less by this amount than the pressure on the cylinder cover. Wherefore, there is an excess of pressure forcing the engine frame in an opposite direction to the motion of the piston. It is this force which produces the counter and balancing oscillation of the engine frame already alluded to. Having two masses in motion we have two inertia forces which are equal and in such direction that they *add* their effects on the bearings. The value of their sum depends on the proportion between their two motions. For suppose the mass of engine frame and foundation is $M_1 = aM_2$; M_2 being mass of piston. The stroke in space of M_1 is $y = \frac{x}{a}$, where x is stroke in space of M_2. The nominal engine stroke is obviously $= (x + y)$. The value of the combined inertia pressure on bearings is

$M_1 \frac{d^2y}{dt_2} + M_2 \frac{d^2x}{dt^2} = 2\,M_2 \frac{d^2x}{dt^2} = 2\,M_2 \frac{a}{a+1} \frac{d^2(x+y)}{dt^2}$. If $a=1$ or mass and motion of engine frame are equal to those of piston, the inertia stress on bearing would be equal to that due to piston alone moving over its full nominal stroke. But if a is large which is the case with a fixed engine, the stress approximates very closely to twice that value.

Mr. Swinburne, I think, first pointed out this important fact. It establishes the very momentous principle that :—The balancing effort of a fixed unbalanced engine doubles the inertia stresses.

I remember in time that this statement needs an important qualification. It presupposes that there is no "cushioning" whatever, either of the piston stroke or the frame stroke. For if there be resilient resistance to the motion of the engine frame, this has a similar effect to cushioning in the cylinder, which as you know relieves the bearings of inertia stress. As to the measure of this cushioning it depends upon the nature of the resilience. If such that its elastic force per unit of compression is small, as for instance, springs of long range, it is feeble and has no great effect in reducing bearing pressure. But in the reverse case the cushioning will be very powerful. It follows that the more rigid the fixing, and the more perfect elasticity it has, the greater the relief of bearing pressure. Were the mounting perfectly elastic, and had it elastic force equal to the inertia force, or were the piston cushioned to a similar degree, there would remain *no* inertia stress on the bearing.

This shows how greatly this qualification may modify the principle as stated. It leads us on rather uncertain ground, as we cannot gauge the cushioning property of the foundation beds.

During the first half of stroke, the inertia pressure opposes m pressure, in the second half it assists it. As is quite m, it is not an altogether evil property of the

engine mechanism; for one thing it helps to counteract the explosive violence with which the steam pressure comes into action. Were the parts devoid of inertia the looseness in bearings would be taken up with a sudden jerk at each reversal of stroke; unless by suitable cushioning of the exhaust it were taken up previously to the incidence of pressure. To minimise "knock" we want the "backlashing" of the mechanism to take an appreciable time: the greater the arc of crank travel we can spread it over the better. Inertia helps towards this.

Evidently the best result obtains, when the cushioning is so nicely proportioned to the inertia, that the piston is brought to rest slightly before the crank reaches the centre. But as the piston speed is increased, the inertia itself grows beyond control. Cushioning even up to initial pressure becomes powerless to arrest the piston; and it now serves only the useful function of relieving the bearings of part of the inertia stress. The initial pressure fails likewise to start the piston, which is accomplished by the fly wheel: Yet even here, when there is plenty of fly wheel power, we have still a favourable condition for the suppression of knock, since the piston must take appreciable time to catch up to the crank. However, despite this, in quick revolution engines, with alternating stresses, the period for all operations is so shortened, that, in what way accomplished, the negotiation of backlash, (which cannot unfortunately be diminished in proportion with the period) becomes inevitably a blow.

Here is the speed limiting condition in double acting engines. By means of forced lubrication and other devices directed to the reduction of backlash, the limit has been raised, but it keeps itself in evidence. The principle of constant thrust bearings, associated wfth single acting engines has been very successfully invoked to open a way to pass this limit: but having done so another limit is met comparatively close on the first. The

practical difficulties of cushioning the idle return stroke, with the heavier masses concerned, greatly countervail the apparent gain.

All this diverges from the straight track of our subject, but it leads up to an important point of view. We have considered bearings on which the stresses alternate in direction; and others on which the direction is constant. We may add a third class:—those in which the direction of stress rotates. These include bearings in which the stresses rotate continuously and those in which they oscillate over an arc of the circle. An example of the latter exists in horizontal engines, where the weight of fly-wheel, etc., tends to keep the pressure on the bottom half of main bearings: also in vertical engines with belt pulling sideways. Now it is obvious that such bearings are proof against knock, particularly if the rotation of stress is regular, in which case they compare with constant thrust bearings. No doubt some of you have noticed that in horizontal engines with heavy fly-wheels there is little knock in main bearings: also that vertical engines with horizontal drives, which have troublesome knock at light loads sometimes run much smoother at full loads.

The principle of rotary bearing stress seems therefore to afford a feasible method of passing the speed limits I have above mentioned; providing it can be practically applied. It is outside the purpose of this paper to discuss that point however; although it is of interest; as we shall see presently, in discussing methods of balancing, that alternating stresses can be transformed into rotary stresses by purely dynamical means.

We must pass on to the balancing proper of engines.
lysis of the motions of a simple engine, shows that the piston
ıent is compounded of two, a primary component pro-
to the cosine of the angle of crank from the cylin-
cosine pt., and a secondary component propor-
sine of the angle of connecting rod, or cosine ϕ.

The former component is what we, who are mathematically inclined, call a simple harmonic motion: the latter is also a harmonic motion but a complex one: that is to say it is compounded of many simple harmonic motions into which it can be analysed if desired.

The presence of the connecting rod, or secondary, component greatly complicates the problem of balancing. The crank or primary component is easy to treat comparatively. For this reason the elimination of the connecting rod itself from the mechanism comes within the scope of our subject: but I fear the attempt to do so can only bring out the incomparable value for its purpose, of the connecting rod, in every respect but this. Not to weary you with devices which are practically impossible, I take it that the slotted crosshead is the only mechanism that could reasonably be applied as a substitute. And since there is a mechanical veto against subjecting slides transversely to heavy alternating stresses; and furthermore as there is much difficulty in providing adequate bearing surface, it falls far short of the splendid simplicity and aptitude of the link. It would be least objectionable in a constant thrust engine.

An engine with a slotted crosshead, which is the mechanical equivalent of an infinitely long connecting rod, has only primary crank components in its piston motion. It is capable of perfect balance by several simple and practical expedients. The most obvious one is to produce an equivalent but exactly counter momentum in a weight by connecting to an opposite crank through a slotted crosshead. Two similar engines of such type, coupled side by side, with cranks at 180° are in balance as regards what is aptly termed "free force," or the tendency to vibrate bodily: but the forces not being in line, there is a "couple" or moment about a centre which rocks the engine lengthwise.

Unbalanced vibrating moments cause the masses involved to swing about their common centre of gravity. They are not generally regarded as of nearly so much consequence as "free force"; but consideration shows that they may have very similar effects, on a ship's hull for instance. The skewing stress on the bearings is an undesirable feature: and the alternating deflecting stresses exerted on any shaft rigidly coupled to the crankshaft is a yet worse result of their presence. The prevention or balancing of such couples forms an especially onerous section of our problem.

A much used, but mis-named attempt at balancing a single engine is by means of a rotating counter-weight set opposite the crank. Now, a rotary counter-weight cannot balance a linear reciprocation. Although its motion in the direction of engine axis corresponds in counter sense with the piston motion of a slotted cross-head engine; its use introduces an equal want of balance in direction vertical to that which it annuls. For it has an equal motion in direction vertical to engine axis, so that the result is simply to change or rotate the direction of the free force through a right angle. This is an important and interesting effect, especially with regard to its application to the transformation of alternating into rotary bearing stresses.

The journal effect of a counter-weight or any rotary free force applied to the shaft is to produce corresponding rotary stress on the main bearings—a valuable property in the mechanism as shown already. Bearing on this point it is, I think, an established fact that a rotating counter-weight, although it cannot balance a single engine, has yet a valuable influence on its working. The true explanation of this influence is in the introduction of rotary stress; and, if we agree to regard and design counter-weighting in this new light, I am sure we shall find it of immense practical service. The rotary stress in this

case is the resultant of the steam pressure and the inertia pressure, the line of action of which is now transformed into vertical direction to the line of action of the former. This resultant rotation of stress is not of very regular character except under certain conditions of cushioning and cut off; yet, it is serviceable in a degree. The influence of partial, whole, and over counter-weighting on the bearing pressures, is well worth a careful study; but as I have only time in this paper to skim over details, I must not touch on it now.

A counterweight not in the same plane as the reciprocating mass, or counterweights, neither on same radius, nor in same plane as each other, cause rotary couples or moments, which act as rotary skew stresses on the bearings. For reasons evident from the foregoing, such stresses are of much less injurious nature than those due to simple alternating moments.

If a counterweight be set at other than 180° angle with the crank; or if its momentum be made greater or smaller than that essential for "transforming" (by which I mean the attempted balancing before mentioned), the reciprocating momentum, we have a resultant of linear free force and regular rotary free force, which may be described as an irregular or variable rotary free force. If the counterweight momentum be one-half of the reciprocating momentum, acting on opposite radius to crank; the resultant is a constant rotary free force, rotating in opposite direction to crank. Evidently this could be balanced completely by the momentum of another counterweight revolving in the same sense, on the opposite radius. If practicable this would form another method of balancing.

In a cursory fashion we have above discoursed of two methods of completely balancing a slotted cross-head engine. (1) By a similar reciprocating counter momentum or momenta, with resultant in line with original momentum, produced by opposite

cranks, likewise acting through slotted cross-heads in masses, which are either idle or useful, such as pistons of coupled engines. (2) By two equal counter-weights, one on shaft opposite crank, the other revolving round it in contrary direction at equal angular velocity, the radii to coincide when an engine centres, and the reciprocating momentum of each counter-weight to be half that of parts to be balanced. Another method (3) is to have dead weights or another engine set, oscillated in an axis at right angles to the first from the same crank. The oscillating masses to be equal and balanced by counter-weight set opposite the crank. The same applies to a system of three engines or deadweights, disposed at angles 0° 60° and 120°, around the single crank-shaft, which can be perfectly balanced by a counter-weight opposite the crank having double the reciprocating momentum of one engine. And likewise with other such combinations. It is a great pity that the space occupied is so prohibitory of this style of engine; for it is superior to any from the turning moment and balancing points of view; and it admits of the most perfect application of the principle of rotary stress.

The last method I shall enumerate, (4) is the oscillating of a mass (deadweights or other pistons) oppositely to the piston by means of a beam vibrated by linkage to the crosshead.

Comparing these four methods as they influence the journal stresses, when the engine is a single cylinder one; we find that Nos. 1, 2 and 3 relieve the main bearings of all inertia stress, No. 4 imposes upon them double the stress due to piston alone, *i.e.* the maximum alternating inertia stress that would be due a similar fixed unbalanced engine. On the crank pin or pins os. 1, 2 and 4 are alternating stresses also equal to above ned maximum. On that of No. 3 is a regular rotary same magnitude. Comparing them as they affect the question of weight added to the mechanism, assum-

ing for purpose of comparison that the velocities and masses of the balancing weights are in each case designed to be equal to those of the reciprocating parts, we find that in Nos. 1, 2 and 4 the nett additional weight is equal to that of the latter : in No. 3 it is double this. Which is the price we have to pay for the advantage of rotary stress on the crank pin.

It will be found that these conditions obtain very generally over the whole ground traversed by our subject. We can eliminate the inertia stresses on the main bearings : but we can neither eliminate nor reduce them on the crank pin ; where they remain as in an unbalanced engine ; except that we can convert them from alternating into rotary stresses. In all cases the added weight can be made useful by adapting for the parts of added engines.

Here I would note that it is possible by cushioning to take all inertia stresses from the bearings.

Therefore, we are now able strictly to class and define the advantages derivable from balancing under three heads as follows : (1) The elimination of the racking stresses, on the engine frame and attachments, arising from the balancing effort. (2) The elimination of inertia stress on the main bearings. (3) The possible conversion of alternating crank pin stresses into rotary stresses. These of course have their subsidiary advantages.

We have a clear way now for discussing possible modes of balancing the connecting rod engine—the practical engine *par excellence*. First let us acquire some notion of what the disturbing effect introduced by the variable angularity of the link may amount to. It adds or subtracts inertia pressure in a proportion of the primary or crank component, which has four maxima per revolution of the crank—being $\frac{-1}{\sqrt{r^2-1}}$ at 0° and

180° and $\frac{1}{r}$ at 90° and 270°, r being ratio of rod to crank. If $r = 4$ the maximum influence is ·26 of primary free force; if $r = 8$ it is ·35 thereof. These disturbances are not negligible therefore. If we analyse the secondary component motion into a series of simple harmonic motions, we find that the governing term for the accelleration is proportional to $\frac{1}{r}$ cos 2 pt. So dominant is this factor in the series that for most practical purposes we are justified in ignoring the remainder.

If we oscillate an equivalent deadweight or piston, in the same engine axis, but on opposite side of shaft, from the same crank, and by connecting rod of same length as original engine, the terms expressing the secondary components disappear from the combined equation of motion. Which is manifest also from a diagram of the mechanism which indicates clearly that the C. G. of the two masses moves regularly with the crank, independently of the angle of rod. Only primary components remain so that the resultant effect is identical with that of a slotted crosshead engine, with reciprocating parts of double weight.

Further if the second piston or weight as above be oscillated by an opposite crank, connecting rods being of same length, both primary and secondary components cancel out, and perfect balance is obtained. But there are serious practical objections to this arrangement; chiefly with regard to space and awkwardness of construction.

If the engines and therefore the connecting rods are on the same side of crank shaft, the secondary effects add whether cranks on the same or opposite radii. If coupled, side-by-side, engines work on cranks at 90°, the secondary components nearly **lance** the difference being at maximum $\left(\frac{1}{\sqrt{r^2-1}} - \frac{1}{r}\right)$ **s from statements above**: but there is considerable

primary free force, being 1·41 of that of each engine singly, in such an arrangement. However with three similar engines, coupled side by side, with cranks at 120°, it happens that primary components balance perfectly, and the secondary components come very nearly indeed into the same condition. Messrs. Sankey and Robinson first published this fact in their paper read before the Society of Naval Architects, and they are responsible for the proposition that a six crank engine is the simplest arrangement, capable of perfect balance in itself, without special balancing mechanism; the three additional engines being necessary to suppress the moments.

They are so far right in this contention that their arrangement approaches most closely indeed to perfect balance; but from the practical point of view Messrs. Schlick, Yarrow and Tweedy have gone one better in that they with a four-crank engine secured a good approximation to balance, both as regards free force and moments. In their system, which is being successfully applied to marine engines, the cranks are arranged each about 90° apart, but so far removed from the exact angle as will secure the best balancing effect. In short, their arrangement is such as is indicated by complete mathematical study and analysis of the four-crank engine motions, having in view the nearest attainable degree of suppression of free force and moments, without the addition of extra weight and parts. I must refer you to their specifications as to the manner it is worked out.

It is this particular mode of attacking the balancing problem I would commend to your notice to night. If I cannot persuade you to introduce special balancing mechanism, I hope that at least you will make it a cardinal point of your engine design that the parts shall be arranged to ensure the minimum possible want of balance. For instance, with two crank engines you will find that nothing is to be gained by deviating from an

exact angle of 180° between the cranks; when the free force will consist of the sum of the secondary components, and will alternate at double the periodicity of the engine having maxima of $\frac{-2}{\sqrt{r^2-1}}$ at 0° and 180° and $\frac{2}{r}$ at 90° and 270°. Therefore, the rod to crank ratio must be given its maximum practical value, and to subdue the moments the two lines of reciprocating parts must be brought as near together as possible. Even the convenience of having one common piston valve for the two cylinders placed between them might be sacrificed. However, do what you will, I fear you will find no very great scope for improvement in two cylinder engines without radical change of design; but in the multi-cylinder class you have a field more fertile of self-balancing expedients; and in any case the investigation has indirect utility in the fresh light it throws on the working and stresses of the mechanism.

Let us now return to the balancing of the single-crank engine. In fact, in the baffling quest after means of suppressing moments, one is continually forced back upon this consideration. In the midst of the practical difficulties which stand in the way of their removal, the query persistently occurs to one, whether it were not better to balance each engine of a set completely in itself, than to flounder in the well-nigh impossible feat of making the parts on one crank balance those on another.

As regards possible methods of balancing a single crank connecting-rod engine, we have mentioned that equivalent to the No. 1 of the slotted cross-head engine. No. 2 is out of the question in this case, unless we can adopt a most ingenious suggestion of Mr. J. H. Mc.Alpine, and make the effective radius of the counterweights vary by means of eccentrics or cams in a way to compensate for the connecting-rod effect. I am, afraid, though, its location is outside the confines of practice.

No. 3 would need a similar compensatory arrangement of the counterweight. No 4 is quite feasible in the connecting-rod engine if the linkage is arranged so that the angularity errors of the links correct themselves, as is possible.

Another method has been invented by Mr. Mc.Alpine, intended for use in steamships, which consists of a weight oscillated by a cam on the shaft, of suitable shape; a sort of mutilated eccentric working in a slot. You will agree with me that it would be quite inapplicable to high speed engines.

I have myself invented two methods, which it is rather premature to mention just yet; but I will describe them but briefly. They have for their object the compensation of the secondary component, while introducing a transverse component, so that counterweighting opposite the crank will afford perfect balance. Incidental is the rotary stressing of the crank-pin bearing.

The one consists of an extension of the connecting rod beyond the crank by amount equal to its length between cross-head and crank, and attaching at the end a weight equal to that of piston and crosshead. The secondary motions of this extra weight are of opposite sign to those of the piston, and they cancel therefore. The effect is actually as though the total mass to be balanced were gathered at the crank pin. And it is easy to see why this is so, for the piston having uni-direction motion, its mass acts as though gathered at the cross-head, in which case the crank-pin *would* be the C. G. of the total mass. The extension need not necessarily be so long as stated, but the weight must be increased to compensate for decrease of leverage. Since the weight has a transverse motion, double that of the crank, a counterweight having momentum equal to the sum of those of piston and extra weight, will balance the mechanism except for the moment caused by the transverse

motions of weight and counterweight not being in line, and a certain subsidiary moment referred to below.

In locomotives the latter defect is easily rectified by distributing the counterweight, over two coupled wheels, in suitable proportions, or by utilising the coupling rod to complete the balance, so that the resultant transverse momenta are brought into line. Further, a parallel linkage might be used to bring the weight back into a transverse line with the shaft; which addition would spoil the pristine simplicity of the arrangement; though it also corrects a yet more serious defect:—the tendency of the swinging weight to produce alternating stresses on the slide. Yet another defect is corrected thereby, being that from the gyration of the connecting rod mass there arises a moment of forces, which would become a serious item if heavy weights were rigidly attached to rod and became concerned therein. Connecting the weight to the rod by a central pivot on which it is free to revolve, would also remove that effect.

The second method is the outcome of the first, and though it lacks some of the essential simplicity of that one, it has not its defects. It consists of a weight equal to that of the reciprocating parts arranged to swing about a fixed centre, at the end of a link, equal in length to the connecting rod, over an arc similar to that described by the rod. The weight to swing across the shaft centre; and the pivot to be in the engine axis towards the cylinder. If this weight swings in time with the rod its motion in the direction of engine axis exactly balances the secondary omponent of the piston motion: and its transverse motion is nceable by that of a revolving counterweight opposite the t with momentum equivalent to that of piston parts. Perance is therefore obtained.

actice, at least two swinging links would be required e weight on each; as it would be difficult to get the weight into the necessary position, and to give it

the motion. The use of two, however, gives good facility for arranging them where their presence would not be inconvenient; and each may be oscillated by a link to the connecting rod in such a way that no error is introduced. The weight may be greater than that of parts to be balanced; and the link, and consequently the arc of travel shorter; and vice versa: the essential points being that the momenta shall be equivalent, and the oscillations similar.

You will observe that this method is in some ways analogous to the number (3) described with reference to the slotted cross-head engine. It is in fact the same altered to suit the motion, by curving the guides on which the transverse sliding weight is oscillated, to a curvature having the length of connecting rod as radius. It would be convenient in some cases to use such curved slides made in the crank chamber, or bedplate, in place of suspension links. The counterweighting is best accomplished by means of crank discs, and it would be preferable to build such crank shafts. The nett extra weight added by the first method is three times that of the reciprocating parts, by the second it is twice only.

To most of you I expect, it seems a strange and idle thing to talk of adding in this way to the mechanism for an apparently superflous purpose. Yet you have long ago become familiarised to the use of massive flywheels for a somewhat analogous purpose; and later on you have learnt to accept the large and undreamt of increase in the proportion of bearing surfaces which high speed has rendered imperative. Perhaps in time, but I will not prophecy, you will also come to regard balancing mechanism as an ordinary and proper feature of an engine.

You whose faith and interests are absorbed in weight, space, trip gear, slow speeds, and rope drives will never have much inclination or enthusiasm, to balance: but there is one important branch of the engineering industry in which it is unnatural to

find apathy on this question. Yet apathy or at least half-heartedness there is. Locomotive engineers of all others ought to be foremost in attacking the problem, yet all their energies in this direction are spent upon empirical rules as to the amount of counterweighting desirable and the way to share it between the wheels. I do not think there can be any question whatever, but that balancing locomotives would prolong their working life as well as that of the rails and rolling stock. A smoother existence at least would result for the driver and fireman, and the travelling public in general. Relieved from the severe vibratory effects caused by the vertical free forces of counter-weighted wheels, rail joints would have a chance of remaining tight and true, and the "railway jolt" would have to be rechristened a lullaby.

There is really no great obstacle in the way of a perfect balancing of locomotives; even though standard patterns be held as entirely sacred as they are deemed by those who build them. For instance there is scarcely a valid objection to the application of bobweights as suggested by Mr. Yarrow, oscillated by opposite cranks and reverse connecting rods. And either of my methods described above may be fitted without any radical change of design. With greater latitude in the general plan of a locomotive almost any of the methods I have enumerated could be applied with success. Alteration of the disposition of crank and cylinders opens the way for many solutions.

A simple one is possible when the cranks are opposite by operating a bobweight in line with each cylinder from the opposite crosshead: provision being made for keeping strain off the slides and compensating the secondary components, by the mode of linkage. The same is applicable to stationary and marine engines, but it must not be forgotten that when balancing mechanism is operated from the crosshead, the inertia stresses are relieved from main bearings.

Lastly I would briefly draw your attention to the fact that hydraulic balancing is possible, a piston being employed to vibrate columns or masses of fluids, such as oil, water, or mercury in the required manner. Secondary pistons could be adapted to modify the movement of the columns to balance the secondary components if the pump could not be operated by a reverse connecting rod. Likewise hydraulic linkages or connections could be employed to operate the balancing weights.

The final section of this paper I will devote to consideration of the want of balance caused by uneven rotation of the shaft, which is much as to say by variable turning moment. When a shaft is doing constant work and the turning moment applied to it varies, energy is being alternately supplied to and taken from the fly-wheel. This causes a tendency to a periodical reversal of torque as between the crank and fly-wheel; and this puts vibratory stresses on the engine frame acting to swing it about the shaft centre. That execrable piece of mechanism, from our present point of view, and from that view alone, the Otto cycle gas engine, is a striking instance of this effect. For less than quarter of the cycle we have a very powerful torque applied to the fly-wheel by the crank; during the remaining three-quarters there is a reverse torque of correspondingly smaller dimensions.

The size of fly-wheel does not affect these stresses; as, although with heavier fly-wheel, the variation of speed, and therefore the accelleration is smaller, the mass is proportionately larger. There is evidently only one solution to this difficulty, which is to steady the turning moment. Until this is done it is almost useless to think of applying any of the refinements of balancing to the modern gas or oil engine.

Here I must bring these remarks to a close. I had hoped at one time to have done better, to have assembled my facts with more care, and to have put them more attractively

before you by means of wall diagrams and models; also to give in an appendix the mathematical treatment of some of the points touched on. But the inexorable demands of other affairs spoilt my good resolutions. I trust, however, that the paper will be provocative of a good discussion, and if it arouse you to that, I shall not have written in vain.

DIAGRAMS.

The diagrams herewith are not put forth as illustrations of possible types of balanced engines. They are simply crude and exaggerated presentments of the principles of the methods described.

Fig. 1 and 2 show a slotted cross-head engine with two pistons in line, operated by opposite cranks.

Fig. 3 shows a connecting rod engine of same construction, with reverse connecting rod in order to balance secondary components.

Fig. 4 shows slotted cross-head engine with oppositely revolving counterweight discs, the loose ones being driven from the others by bevel gearing and fixed pinions.

Fig. 5 is a slotted cross-head engine with cylinders at right angles and balanced by counterweight discs.

Fig. 6 is a connecting rod engine, balanced by weights on beams linked to cross-head.

Fig 7 is the author's method of balancing the secondary components of piston motion by extending the connecting rod to take a suitable weight at end, and balancing the whole counterweight disc. Unless the transverse motions of counterweight and connecting rod weight are brought into line the balance is not perfect, as there would be a moment of forces due to these motions.

ig. 8 is the author's method of complete balance of single by means of swinging weights and counterweight discs.

DISCUSSION.

Mr. Thomas Ashbury asked the author whether he had seen a model of a device by Mr. Holroyd Smith, which had for its object the overcoming of the difficulty of balancing engines, and which aroused great interest when it was submitted to the members of the Institution of Mechanical Engineers at their meeting in Birmingham last autumn.

Mr. J. Parry said Mr. Swinburne's suggested method of mounting machinery on springs seems to be the partial adoption of a principle adopted by Mr. Worby Beaumont, in a machine which is called a "vibrometer." The principle expressed in Mr. Beaumont's own words is: "If a thing wants to wobble, let it wobble; reduce the amount it wobbles as much as you can, but don't fasten it to a building and make that wobble also." It does not seem practicable to apply this principle fully in the case of a steam engine, because some connection or contact with the earth is necessary for turning effort reaction.

The method of carrying an engine foundation on an elastic sub-bed, he believed, had been adopted at one of the London Electric Light Stations with considerable advantage.

Speaking of locomotives, locomotive engineers were perfectly well aware that this machine, as generally constructed, was not perfectly balanced. Simplicity, however, cannot be easily sacrificed.

Some of our fastest trains were successfully run by outside cylinder engines, *although* they could not be nearly so well balanced by revolving weights as inside cylinder engines could be. The ordinary inside cylinder engine was, therefore, sufficiently well balanced for greater speeds than have yet been

attained; or in other words, the *present* limits of speed were not fixed by questions of balancing.

Referring to the remarks in the paper with respect to gas engines, he thought the difficulty could be very much reduced by constructing the engine so as to drive two heavy fly-wheels in *opposite* directions. One way of doing this would be in the same way that steam engines were adapted to drive Root's blowers, but with the cranks on opposite sides, so as to be able to get large fly-wheels in. Those interested in motor cars driven by oil engines can possibly make use of this suggestion.

Referring to the author's suggested method of prolonging the connecting rod to double its length, and putting a weight at the end equal to the reciprocating parts; to this there was another objection besides the one mentioned in the paper. There would be a very great bending moment produced in the rod at the big end bearing. He thought, however, that such advantage as might be got from a *lesser* prolongation and a *lighter* weight would be worth having, especially considering that it might be made so as to reduce the bending moments, due to inertia, in the working part or body of the rod.

Mr. Alfred Saxon said that the paper would be very valuable in that it would cause them to use their brains in a direction in which, in his case, they had not been too often exercised. He was very much interested at Birmingham in the model exhibited by Professor Holroyd Smith, which seemed to be a very feasible method of overcoming the difficulty.

With regard to some points which the author had elaborated with much care, he (the speaker) thought it was a question of introducing evils to cure evils; at any rate that would probably be the light in which many of the members would look at some of the suggestions made. Ought they not to look in the future for lighter and stronger material for high-speed engines, and

by means of this, without making their engines into balancing abortions, obtain the required result. They had materials now to their hands which would enable them to do something in this direction. They were bound to go in for balancing with simple or compound high-speed engines unless they made use of lighter materials, and overcame the difficulty in that way—just as since Fairbairn's day they had improved the balance of engines by introducing material of less weight. The engineers of the future would certainly have lighter and stronger material to choose from than those the present day possessed, and he believed that in some such direction as this, without complicating the mechanism of the engine, progress would be made. They had all need from time to time to deal with engines which required balancing, but he might say that in connection with modern slow revolving mill-engines, such as perhaps most of the members present were associated with, they did not have difficulties of that sort now. What with improved design, and large fly-wheels, and rope driving, etc., and putting in what might appear to some people almost a waste amount of masonry and foundations, they were troubled very little, if at all, with these balancing questions, which seemed to arise with high speed engines. He quite agreed with the author when he referred to the three-crank engine of Willans and Robinson, and the four-crank engine of Yarrow, that high-speed engines could be utilised best in series of that kind, by which the difficulties were almost if not entirely overcome.

Mr. W. H. Hunter said that he was not an engine builder, but was very frequently an engine buyer, and in that capacity desired to make certain observations on the paper which had been read, and on the discussion which had followed, so far as it had gone. The first remark he would ask the engine builders to allow him to make was that they must not imagine they

were going to escape from the difficulties of this subject by stirring up the mud like a certain denizen of the sea, which adopted this ingenious device when in trouble, and amidst it making their exit; that would not quite meet the difficulty. He was thinking specially of locomotive engines. He was a bridge builder, and these large unbalanced high-speed locomotive engines affected bridge builders in two ways. In the first place the immense speed, say sixty or seventy miles an hour, at which locomotives in some cases dashed over bridges, brought about a situation which of itself entailed, necessarily entailed, a large addition to the weight of material in the bridges. The bridges were subjected to alternating stress, then relief of stress, and then alternating stress again; many parts or members were now in tension, now in compression, now at rest; this could not be avoided, but added to it was a factor most difficult to take into account, and one which it was practically impossible to calculate but which seriously affected the life of the bridges. As the engine passed over the bridge it was subjected to a series of dynamic shocks, produced by the unbalanced weight of the moving portion of the engine. Each of these shocks was in itself, perhaps trifling, but a series of them produced, especially on crowded roads, not only an effect upon the fastenings of the bridge, but also, he feared in time molecular change in the structure of the material of the bridge; so much so that if he were a railway engineer he should be afraid to do what he conceived it was the duty of every railway engineer to do—to subject portions of the bridge to examination—in order to detect whether the above named change had not ken place. He was as certain as that he was standing there, there were bridges in this country, on which life and limb eing daily risked, in certain parts of which molecular ad taken place, with the result that the material of bridges were composed was nothing like competent

to sustain the stress it would have resisted twenty, thirty, or forty years ago. This was a matter of grave importance. They must not talk of complications which might be needed to carry out the balancing of engines. The builder had to consider the man who had to make and maintain the road for him, and also the man who had to build, and was responsible for the maintenance of bridges over which his locomotives travelled. The engine builders must not hide their heads in the sand. The difficulty was there; it behoved engine builders to face it, and some day, sooner or later—probably by a process of tentative procedure—the solution would be found.

Mr. R. S. Holland said that most of the failures he had seen had been made by people who tried to balance engines; the best engines he had seen at work were those which it had not been attempted to balance. He could have mentioned names if it had been advisable. Of course they were getting higher speeds now, and it would be an advantage if they effected an improvement by balancing, but he reiterated that he had never seen engines work so well as those in which no balancing was attempted.

Mr. J. Bolas said that the locomotive was not a perfectly balanced machine, and as a matter of fact a perfect balance could not be obtained on any engine or machine in which revolving weights were employed to balance reciprocating masses, because that part of the revolving balance weight which was added to neutralize the effect of the horizontal reciprocating weights would produce a corresponding unbalanced force in a vertical direction.

He quite agreed with Mr. Hunter that many locomotives had been constructed, having balance weights of such dimensions, that bridges over which they ran would be exposed to grievous

dynamic shocks every time this unbalanced vertical force came upon the rails, and if the period of this shock coincided with the panel length of the bridges, the vibrations set up would have a serious effect upon the life of the structure.

It was, however, quite possible to arrange the balance weight upon any locomotive in such a manner that there would be no unbalanced vertical force acting upon the rail; in this case the evils complained of would not be experienced. All depended upon the amount of the reciprocating weight taken into account when proportioning the balance weights, if it was attempted to balance the greater part of the reciprocating masses they at once introduced a corresponding vertical unbalanced force which acted upon the bridge, but if on the other hand no attempt was made to reduce the effect of the reciprocating parts, these parts produced a sinuous movement across the road tending to spread the rails.

By a proper appreciation of the surrounding circumstances in every case, such a compromise could be effected that a perfectly steady running locomotive could be designed, as was proved by the speeds attained at the present time.

The system of balancing adopted, though not theoretically perfect, was simplicity itself, and was in his opinion far preferable to any complications which would be introduced by an attempt to theoretically balance the reciprocating parts of the locomotive.

Mr. R. Gregory referred to the author's statement that "with two crank engines nothing is to be gained by deviating from an exact angle of 180° between the cranks." Commenting on this he said he had had to do with the changing of cranks, and found that by putting them quarter centre there had been less vibration, better turning, &c., so that he thought the above remark was not correct. In engines they were now making he

thought they had got over the question of balance by means of the heavy fly wheel. Years ago, with the heavy beam engines, there was a good deal of balancing by weights, &c., and the fly wheels were scarcely half the weight they ought to be, but to-day, with wheels of the weight now adopted, he did not think the engines required balancing. In marine engines, of course, there was no fly wheel power, and in the case of these he thought that with four or six cylinders and more pulsations, the turning was sure to be better. It would be the same with a locomotive if they could couple more cylinders up. Supposing, with locomotives having four cylinders, for instance, they could have eight pulsations instead of four, he thought the difficulty in question might be overcome, and that was the only way in which they could overcome it in locomotives. In marine engines balancing would be necessary.

Mr. Hans Renold said he had not had much experience in the balancing of steam engines, but during the last six years or so he had made a very interesting study of the balancing question, in connection with some fifteen machines. Mr. Renold then described, with the aid of a diagram, the method he had adopted to balance a riveting hammer, which ran 850 revolutions, and in which the weight of the ram in the tube was about 1¼lbs. The total stroke was 1½in.; the weight was about 8 cwt. He had adopted various devices with the object of balancing this hammer, but with only indifferent success, until at last he balanced it in the crank, which proved satisfactory. This might throw a light on the balancing of engines with crank-pin balance. Mr. Renold also gave particulars as to the way in which he had balanced another machine.

Mr. J. Watson said one thing was certain, viz., that the method of balancing engines which was so much in vogue in

former years, when they ran at slower speeds, had to a very large extent disappeared. Not very long ago he met with a case where the old fashioned system of balancing an engine by putting a weight in the fly-wheel was adopted. In this case an attempt had been made to balance the moving parts by bolting a piece of metal on to the rim of the wheel, which weighed something like 12 cwt, the engine running 55 revolutions per minute. From the effect this had on the bearings, he came to the conclusion that for engines running from about 60 revolutions and over, balancing in this manner was of very little use, provided the fly-wheel was of ample weight. The weight of the wheel and shaft in the case mentioned was about 45 tons, and the centrifugal force of the lump of metal bolted in the rim was about ten tons, so that there was about 50 per cent more pressure on one side of the bearings than on the other, and in time he thought this could not fail to have a deteriorating effect upon them, particularly in the direction of a tendency to wear the journal flat on one side. With regard to the general principles enunciated in the paper, he in the main agreed with the author. They seemed to be a little too advanced for those of the members who were mill engineers, but he had no doubt whatever that in regard to engines running at a high speed, far greater importance would have to be attached to the question of balancing in the future than had been attached to it in the past.

Mr. W. Ingham quite endorsed the author's remarks as to importance of balancing locomotives. His attention had been called many years ago to a very peculiar effect on a locomotive boiler, which could only be attributed to want of balance in the locomotive itself. This was a case of external grooving at a circumferential seam.

No doubt the question of balancing was bound to come more and more to the front with the increased adoption of higher

speeds, and a paper of the sort they had before them was valuable, in causing them to think on the matter, and for future references in their Proceedings.

Mr. J. PARRY said there were plenty of locomotives whose arrangement of balance weights produced no dynamic shock on the rails. Referring to a certain engine built in America some time ago, he said it was perfectly balanced in every respect but one, and that was an important one, but not from the bridge builders' point of view. It was balanced with respect to vertical action and with respect to surging, but not with respect to sinuous motion. The engine might nevertheless be a good one.

The breaking of the rail at St. Neots a couple of years ago was probably accelerated by the action of the balance weight on the engine.

Mr. W. INGHAM said he had seen some rather peculiar effects when the period of oscillation of a building had been a multiple of that of the engine. The periodical movements of long pendulum engine governors with the balls moving at a certain speed had coincided at a certain point with the period of oscillation of the structure as a whole, and the movement had been felt throughout the entire building.

The PRESIDENT (Mr. Henry Webb) said that certainly high-speed reciprocating engines for direct driving were coming prominently to the front, and this question of balancing would have to be faced.

He had pleasure, on behalf of the members, in tendering to Mr. Whitcher their hearty thanks for his interesting contribution to their "Transactions."

Mr. WHITCHER, in responding, thanked the members for the kindly way in which they had received the paper, and said that they seemed agreed to treat him to more flattery than criticism.

He regretted he had not seen the model of Mr. Holroyd Smith's balancing arrangement.

As to the inertia stress on the bearings, it was a case of two moving bodies meeting, not of one moving body striking a stationary one. The piston was in motion and the bed was also in motion—perhaps only to an infinitesimal extent, but still, in motion, and the collision of the two bodies caused the pressure. As regards the bending of the connecting rod, that was a very serious matter; he mentioned it in connection with Fig. 7. This was one of the things that was counteracted by the parallel linkage spoken of. Instead of putting weight on the connecting rod, it was put upon the cross-head behind the rod, and arranged so that it would swing across the shaft centre and take all bending stress off the connecting rod.

No one had touched upon the question of rotary stress. If they used their methods of balancing to produce that they obtained another advantage; not only did they balance the engine, but they overcame the question of "knock." If they had a pair of shafts revolving in a bearing, and the stress came on the top and then on the bottom, that was "alternating stress," but if instead of the stress travelling this way it travelled round, the shaft bedded itself naturally.

As to obtaining lighter and stronger materials—they had to be found. They were rather "in the air" at present.

With regard to the cranks at 180°, and the fact that it had been found in practice better to shift them from that position, this alteration giving less vibration, he could only say it depended on how the vibratory stresses were measured; he did not know how to measure them. He thought the improvement mentioned might not be due to the alteration named, but to something else; it might be due partly to something in connection with the cushioning. Or very possibly the cases in

question referred to that much favoured type of coupled engine in which the flywheel is carried between the two cranks. In this type, the two lines of reciprocating parts being widely separated, the unbalanced moment of forces is very pronounced; and the foundations are not well adapted to resist this kind of vibratory stress. If the cranks are placed at right angles these twisting vibrations are somewhat reduced; and although "free force," or to and fro vibrations are introduced, under the circumstances, they are the lesser evil.

Mr. Renolds' method of balancing was very ingenious. He agreed that balancing was of very little use if they used heavy fly wheels. It was quite unnecessary in such cases, but they could not always use heavy fly wheels, and it was only to cases where these could not be adopted that his remarks applied.

SUPPLEMENTARY REMARKS:—

As a supplement to my remarks in the above discussion, I would point out that although in the case of slow rotation engines with heavy flywheels the balancing problem has scarcely any status, yet all that I have brought out in my paper regarding foundation and bearing stresses, applies as much to them as to quick rotation engines. Therefore there is in it something of interest for designers and uses of the former type as well as of the latter.

The circumstance that in the one type want of balance is of smallest practical importance, while in the other it is of very serious moment indeed, follows from the fact that the inertia forces of the reciprocating parts are proportional to the piston speed per second multiplied by the revolutions per second. For instance, a weight reciprocating at an average speed of 600ft. per min., 60 times per min., would exert five times the inertia pressure if oscillated at same speed 300 times per min. Hence it is that in all quick rotation engines it is necessary to sacrifice

piston speed; since rates that are common in slow rotation engines become unmanageable at high revolutions.

Quick rotation engines are largely the outcome of the movement to eliminate or simplify intermediate gearing between the motive power and the work; which is characteristic of modern mechanical engineering. The great obstacles in their way are, the immensely increased significance of the inertia forces, the reduction of the "back lashing" period, and the sacrifice of the "rotary and constant stressing" of bearing surfaces and slides, which obtains in the horizontal slow rotation engine, and is due to the weight of the parts. And I ought perhaps to add the loss of the advantages of trip valve gearing, but this is a more questionable point.

The discussion of these obstacles was one of the principal objects of my paper; and while I cannot claim to have practically surmounted them, I think I have succeeded to some extent in indicating the lines on which they may be met.

Summarising my conclusions in this connection, I find that for the design of a really high-speed engine, *i.e.*, one with high piston speed and quick rotation, especial regard must be paid to the following considerations:—(1) "Rotary stressing" of bearings; (2) "Constant stressing" of parts and slides; (3) Effective cushioning, as well to equalise the turning moment as to relieve the bearings of inertia stress; (4) Effective balancing, also equalising the turning moment (by the flywheel action of the balancing parts) to relieve bearings of inertia stress, and to avoid external vibratory stresses; (5) Forced lubrication.

Prof. Holroyd Smith's system of balancing engines consists, I find, of two counterweighted crank discs revolved in opposite directions by two connecting rods from the same crosshead. There would be, I should say, considerable difficulty in utilising n practice; and, besides, the balance is not perfect because nfluence of connecting rods is not corrected. It is a prac-

tical expression of the principle illustrated in Fig. 4, the slotted crosshead and gearing of which would not be feasible in practice. If he extends *both* connecting rods beyond the crank pins and applies suitable weights, as in the author's method of Fig. 7, the balance can be made quite perfect, with no other objection to it than that of practical applicability. Mr. Parry's ingenious proposal to use two flywheels running in opposite directions on gas engines is of much interest in this connection, and is certainly worth careful consideration by those who would like to see gas and oil engines running more smoothly than they do.

Finally, in answer to the prevailing objection that balancing mechanism means over-much complication, I would repeat that its functions are as clearly defined as those of the flywheel, and they are of the same practical importance. We should not dream of putting a universal taboo against the flywheel, because it is a dispensable part of an engine. Let us not, therefore, pronounce too hastily and universally against balancing mechanism on like grounds.

Plate 1.

E BALANCING OF ENGINES.

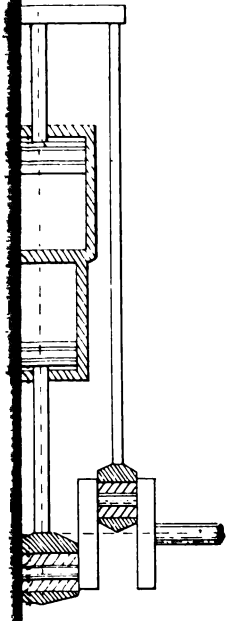

Fig. 1.

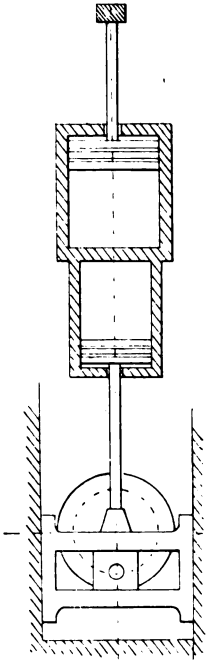

Fig. 2.

THE NEW YORK
PUBLIC LIBRARY

ASTOR, LENOX AND
TILDEN FOUNDATIONS
R L

Plate 2.

E BALANCING OF ENGINES.

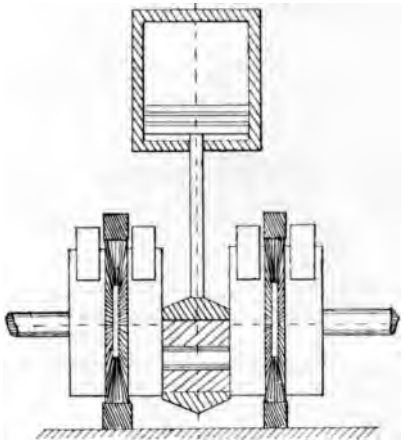

Fig. 4.

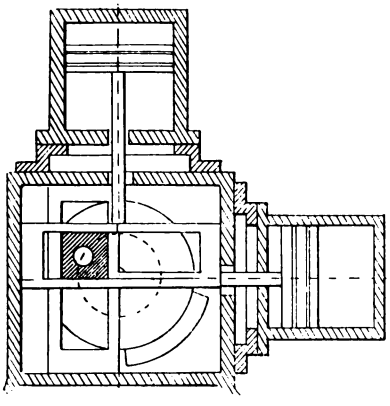

Fig. 5.

THE NEW YORK
PUBLIC LIBRARY

ASTOR, LENOX AND
TILDEN FOUNDATIONS
R L

E BALANCING OF ENGINES.

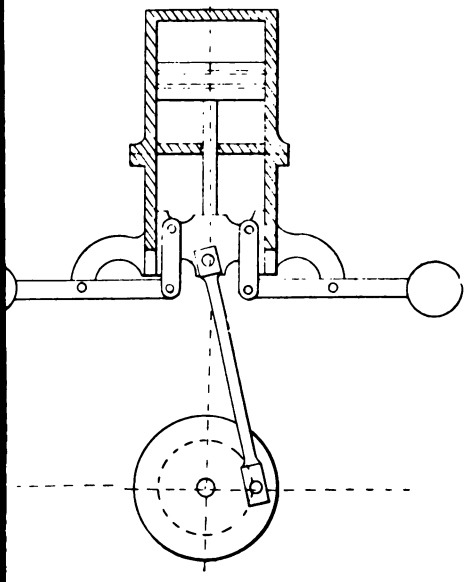

Fig. 6.

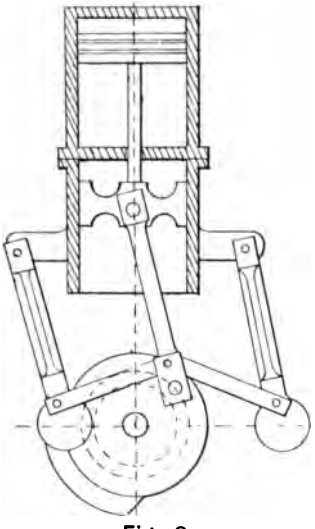

Fig. 8.

THE NEW YORK
PUBLIC LIBRARY

ASTOR, LENOX AND
TILDEN FOUNDATIONS
R L

TOPICAL QUESTIONS.

MEETING, SATURDAY, MARCH 12TH, 1898.

Question 1.

"*It is almost an universal practice in America to pickle castings; is there any advantage in this? Why is it not practised in this country?*"

Mr. HANS RENOLD said that when, ten years ago, he paid his first visit to America, it was a great eye-opener to him to see that almost everywhere he went the castings were pickled. Small castings up to two or three cwt. were put in vats containing sulphuric acid more or less diluted. He also saw some big engine beds two or three tons in weight which were pickled.

Since then he had started it himself and he would say at once that he could advise them to do the same if they were not already doing so. The advantages of pickling were really very small, but they were also very numerous. At the end of the year they would find that the large number of small advantages derived from pickling amounted to a big sum.

Pickling castings gave a smoother surface and generally better finish. It took hard spots and burnt sand out of the surface, the consequence being that when they came to machine such castings, the sharp edge of the tool was very much longer preserved. They could use greater cutting speeds, and considerably greater cutting feeds. When they adopted pickling, castings could be made very much nearer to the size, and it allowed the patterns to be made in such a way that there was very little to be taken off. In his opinion, the less they had to machine a casting the stronger it was. Pickling also enabled them to use

high-class milling cutters, because when once these were prepared they kept on working for a very long time.

Mr. W. Lawson said he had had a long experience in the pickling of brass castings, of which they turned several tons a week. It would be interesting to know what was the usual practice of firms who pickle castings, what strength of acid to use, and the length of time the casting should remain therein. If they did not mind what they were doing, and the castings lay for any considerable length of time in some corner of the works, they would become very rusty.

It was most important for engineers to pickle castings that required to be machined in any way.

Brass castings should be put in nitric acid, of about two parts water and one part commercial acid, and judgment must be exercised as to the time they must remain in. A man was required to look after it. The casting must afterwards be rinsed out in fairly hot water, and put in dry sawdust and wiped. The casting would then have a beautiful surface.

Mr. J. H. Beastow said there was a decided advantage in using vitriol of one hundred and fifty degrees, in the proportion of one gallon of vitriol to thirty gallons of water. The castings should be left over night in the vitriol. They ought then to be drained off and washed with clean water. When treated in this way the castings were quite satisfactory, and the life of the milling cutter was doubled. The workmen themselves preferred the pickled castings. He strongly recommended pickling by means of vitriol to those who had light work to do.

Mr. G. F. Freeman said he had had a good deal of experience in the pickling of brass and copper and there was always an advantage in doing it, but with regard to iron and steel castings

he did not see that there could be so much benefit in it. In the first place the acid would eat into all the pores of the skin of the casting. He thought it was almost impossible to wash the acid out, and oxidisation would take place. Any advantage in the shape of a smoother skin would be lost owing to this oxidisation. Again, in his opinion, any advantage obtainable by dipping the castings into the acid, could be got by dipping them into hot or cold water. This would tend to close the pores, consolidate the metal, give a hard skin and better wearing surface to the casting. The cost of acid would be saved, and less time would be required to perform the operation. The castings would be at once ready for use after being dipped in the water.

Mr. E. Marshall asked whether any oxidisation due to the acid would not be neutralised if the casting were dipped into a bath of ammonia.

Mr. F. Reed said there seemed to be an opinion that sulphuric acid was the only proper thing for pickling iron castings. Hydrofluoric acid, he might mention, would not so much attack the casting as the sand thereon, and that was what they wished to get rid of. A better way to take out the sand was to adopt sand-blasting, but there was another question on the list dealing with that.

Mr. J. Bates said that if pickling healed the castings and took away all the hard lumps, etc., it must be a good thing. The reason why in this country they were not in the habit of pickling on any very large scale was patent. They could make castings clean enough without it, and put sufficient surface on them. A short time back his firm had a small casting, very complicated, about a pound weight. They tried to get these made at another place, and they charged about 3/- each; in the ordinary way his firm could make them at 3d. to 4d. each.

Mr. A. Rea said it was well understood principle in all wire works that it was impossible to draw the rods into wire without pickling of some sort. The chief acids used being muriatic for general work, and sulphuric for piano or other high class wires, which was not so destructive.

When steel or iron rods were subjected to this process it must be admitted that there was an essential deterioration in the structure which produced crystallisation, for if they were left too long in the bath the rods would become brittle and fall to pieces. At the same time no other method has yet been discovered to compete with pickling for simplicity and cheapness.

Exceptional care therefore was required to conduct the operation properly with the minimum of injury.

He had made experiments to see what effect pickling would have on cast iron, and found that the castings if left in the bath for a considerable time could be cut with a knife like plumbago.

The process cleaned them certainly, but was not so effective as when used for cleaning rolled steel rods, owing to the length of time required to affect the harder skin of the cast iron, especially when mixed with burnt sand and so on, while the deterioration was in proportion to the length of time exposed to the acid.

He was afraid, therefore, that pickling, while of use in softening and cleaning the castings, would do much more harm than good, more particularly where the iron was not of the purest quality.

Mr. G. F. Freeman said he had been manager of an iron wire works, turning out eighty to one hundred tons per week, and many a ton had been destroyed owing to the workmen leaving the rods in the acid too long.

THE PRESIDENT (Mr. Webb) said he was in America last September and October, and found that they pickled castings at all the foundries there, and this not only in the case of small castings, but also of large ones. The Worthington Pump Company did so, and the Pettee Machine Company, near Boston, who made cotton machinery, pickled all their frame sides, &c. They did not allow the castings to stand in the bath long enough to take any harm. He had asked them what were the advantages of pickling, and what was the strength of the pickle. They answered one in ten, and added that the advantage was that the castings required no dressing. They thought it barbarous not to pickle castings. They placed the castings in the acid, then lifted them out, played upon them with water by means of the hose pipe, and then swept them with a brush. The castings received no injury and required no dressing, whilst in tooling the cutters lasted longer.

Question 2.

"What is the best and quickest method of dressing castings?"

Mr. J. MUDDIMAN said sand blasting was the best method, and he had some specimens of locomotive cylinder castings to show how the operation acted.

Mr. S. BOSWELL said it appeared to him that something beyond the sand blast was wanted. He thought pneumatic chipping hammers would be found advantageous. The chipping hammer was not now what it was twelve or eighteen months ago. The vibration had been taken out of it, or nearly so, and the men did not feel fatigued through holding it. In conjunction with the sand blast the pneumatic hammer would come in very well. The advantage of the sand blast in cleaning out the pores efficiently was undoubted. After this anything

requiring removing or dressing off would be most readily done with the chipping hammer.

With pneumatic tools coming into use, for various purposes, engineers and machine makers would see the advantage of putting down air-compressors. When they recognised this, they would come to the pneumatic chipping hammer for dressing castings in conjunction with the sand blast.

Mr. T. Daniels observed that locomotive cylinders generally required very little dressing at all, but he would like to know how much per ton it cost to dress these castings with the sand blast and other improved methods. By the old fashioned way of dressing castings they could do it at about 4/- to 5/- per ton.

Mr. J. Bates said apparently when the castings were pickled in the way mentioned by Mr. Webb they came out ready dressed.

In reference to pneumatic tools, some of them would be very much pleased when these were made effective in dressing castings. In their works, however, they had had a "professional" man working with a pneumatic tool, and an ordinary dresser working beside him. The pneumatic dresser in this case was a failure.

The fact was, the question stood very much in the same position as it had always been in. He could not see that any great improvement had been introduced in this direction. The rattler, which had been in use as long as he could remember, seemed to be doing its work as well as ever.

Mr. G. F. Freeman referred to an emery wheel which was 20in. diameter, 4in. wide and which was dressing small castings of two to fourteen pounds each at the rate of eight to ten tons per day. For small castings there was nothing much better than the emery wheel.

The PRESIDENT (Mr. Webb) described a little tool he had seen, which had been designed to take excrescences off castings. It consisted of a portable dynamo on a little bogie, weighing together 2¾ cwt., one b.h.p., running at 1,500 revs. per minute, with 110 volt circuit. There was a flexible shaft 8ft. long, at the end of which was a holder; in the centre of which was an emery wheel 8in. diameter and 1in. thick, this very quickly removed any excrescences from a casting. He had seen it working on a hard, chilled piece of cast iron 9in. deep, and of considerable weight. To this they wanted to weld a steel tramway 9in. deep, Trilby pattern. They put it on a Thomson-Houston electrical machine, and welded the cast piece and the tramway together. When the iron got cold, the metal of the steel tram and that of the cast iron was found to have exuded at the sides. They brought up the little portable dynamo, and this operated by a lad, very soon removed the excrescence.

MR. JOHN TAYLOR said the cost per ton with the emery wheel mentioned by Mr. Freeman would be about 6d.

With regard to pickling, it seemed to be agreed that if the operation was not very carefully performed, deterioration in the casting was caused. They wanted definite statements on these matters, and if the new processes were found to assist them in connection with their special class of work they should adopt them. They should, however, be on the safe side, and not use any system which they did not know to be reliable.

Mr. J. NASMITH said it was scarcely fair to ask what was the cost per ton of dressing by the new methods. There were castings of all sorts, some might want a good deal more dressing than others. They might be able to dress small repetition castings by emery wheels, but with large castings they wanted some method of removing the fins. With regard to pickling, they might be conservative on the matter, but as their President

had told them, it was universal in the United States, and the people there were not all fools. Personally he intended to try pickling on brass castings.

Mr. F. Reed said pickling did not come in as a means of fettling. He had been in a foundry where they pickled all the castings that required machining, but they did not pickle them at the foundry. They did it at the machine shop some miles away, and they did not pickle for the sake of helping with the dressing but for the sake of the beneficial effects derived therefrom in the machine shop afterwards.

Question 3.

"Can defects in iron castings be electrically welded?"

Mr. Kelsall wrote: If the attempt I witnessed at one of our large foundries in Bolton is anything, I say no. Everything was arranged in splendid order, it being a segment of a large pulley, a piece having been broken off the edge, and the endeavour was to fill this up, certainly no great undertaking to fill a hole up, but this was the trouble. The soft metal they use, being fused with the cast iron, and immediately it is cold is found to be so hard that it cannot be dressed. Naturally you will ask why is this when so soft an iron is used; this I will explain; during the melting of the two irons together (*i.e.*, the cast iron of the pulley and the added iron), the latter becomes charged with combined carbon from the graphitic carbon of the cast iron, so that as I said before it cannot be dressed; owing to the intense heat the graphitic carbon—which is only mechanically mixed in the cast iron—becomes converted into combined carbon, making a steel harder than any tools can touch, and the attempt I speak of thus becoming an entire failure.

Mr. A. Rea referred to a successful application of electric ling in connection with a large fly-wheel which had been

broken in two separate places. The wheel was not taken out of its place for welding and was as perfect after the operation as before.

The PRESIDENT (Mr. Webb) mentioned a case of a steam cylinder boring which was found to have a flaw and which had been condemned, but it was electrically welded and filed up where the flaw had been, and was as good now as at first. He had also known of callender bowls of large diameter which had in their periphery a large number of pin-holes, but which had been electrically welded with similar satisfactory results. The wobble end of a cold grain roller had also been successfully welded.

It was possible to electrically weld cast iron to very considerable advantage, and thus save many very expensive castings from being thrown into the scrap heap.

Mr. T. DANIELS asked whether the welded part of the cylinder was of the same hardness as the other part.

Mr. WEBB: Harder.

Mr. DANIELS said he did not think this would be a good thing when the pistons were working over the hard places.

Question 4.

"Has anyone tried sand blasting as a method to produce a surface on cast iron before nickel plating?"

Mr. S. BOSWELL said cycle builders knew most about this question, as they all appear to have adopted sand blasting for preparing the parts for nickel plating.

Metallic packings had to be fitted with springs, more or less large or small. When these springs were pickled and fitted there was generally some pickle left behind, and it was worse

than if they had never pickled it at all. The acid would cause a weak spot in the spring at the point where it was left on.

The varnish or boiled oil was hard to move by pickling, and if the spring was plated on the top of a little film of grease or varnish, this apparently took the nickel but in reality it did not, and nickel and varnish chiped off. When the sand blast had been applied these springs took the nickel very well.

In bicycle work there were very fine spokes in the wheel of a racer which were nickelled at the ends, and if there were a little acid lurking behind on one of these it would mean disaster, but with the sand blast there was no danger. All the parts requiring to be cleaned were cleaned by sand blast. If any part was not right opposite the nozzle of the sand blast the chances were that the grains of sand were directed over the surface by gliding off from one face to another, and every nook and corner was cleaned.

Question 5.

'What is your experience of steel castings after being electrically welded?"

Mr. Daniels said his experience was that the welded parts were very hard and were very difficult to get over, and there was very little chance of finishing a casting after welding.

Of course it was to be regretted that there was any necessity for electric welding, but, unfortunately, they did sometimes have castings with blow holes; what they wanted was a portable electric welding machine, to avoid the necessity of sending castings back to the steel makers.

Mr. Kelsall wrote: I see no reason why they should not be very successfully done. The same theory I have given for cast iron has in nowise anything to do with this subject, for this reason, you use metals of almost an exact equality, say steel

carbon equals ·50 per cent, whereas in cast iron you may have as much as 3·00 to 4·00 per cent graphitic carbon to act upon. But there is still one rather objectionable point, and that is the appearance of the surface you cannot get always alike after tooling, shewing different shades, and some engineers are very faddy about such trifles. I have seen very good results otherwise, and at some works I could mention is generally adopted for castings and forgings without any detriment.

Mr. J. Butterworth said he had had some trouble with half a dozen large steel pistons. Electric welding was tried. He found that owing to the castings having to be red hot, in order to facilitate the welding process, they warped. He also found that the welding was very superficial, and although it presented a nice surface, they came to the bad place again if they went $\frac{1}{16}$ below the surface. There was also a difference in colour.

Mr. Henry Hodgson mentioned the case of a steel wheel which had numerous holes in it. This was sent back to the makers, who filled up the holes by electric welding, and his firm had then no difficulty in finishing it. The surface that had been welded was as good as any other part of the casting, and was not too hard. Steam pipes had also been successfully welded in the same way. He did not hesitate to say that the electric welding of steel by people who were experienced in the work was a perfectly satisfactory process. The electric welding of steel castings had almost become a fine art.

The President (Mr. Webb) said the electric welding of steel castings could be done most successfully. Good firms who had proper appliances would do it well, and those who had made a study of cast iron said it could be done in this case also, but not quite as well as in the case of steel forgings or castings.

879718A

SOME POINTS IN MODERN STEAM ENGINE PRACTICE.

READ SATURDAY, 22ND OCTOBER, 1898,

BY

MR. HENRY HODGSON,

OF GUIDE BRIDGE IRON WORKS, GUIDE BRIDGE, NR. MANCHESTER.

The steam engine, for stationary work, consists of three distinct types, which cover the ground of both ancient and modern practice, viz: the beam engine in its common form, the horizontal engine, and the vertical engine; there are modifications of these to suit exceptional circumstances, and in the case of the vertical engine, there are two well-defined forms, one having the cylinder at the bottom and the crank shaft above, the other being the reverse of this and known as the Inverted Vertical Engine. The horizontal and the inverted vertical are the two types forming the distinctively modern steam engine for stationary purposes. The beam engine is by no means an extinct species, but its numbers are lessening rapidly, and being replaced by more modern types.

Of the two (horizontal and inverted vertical) each has its advocates, and, as engineers are men who never do anything without a reason, they must have a reason for their advocacy. It is true, circumstances may have such an influence as to make one type or the other, (or even the comparatively ancient beam engine) the one most suitable for the purpose, but, apart from limiting circumstances, the question is, "which is the best type for general use?" I advocate the inverted vertical as the best, on the ground of reduced wear and tear, reduced friction, more economical results, and, on the whole, lessened cost on capital

account. I have no doubt there are gentlemen present who hold views to the contrary.

In my opinion the race of engineers who hold that the single cylinder engine is as economical as the compound, for equal boiler pressures, is now extinct, but they have left successors who hold that the compound engine is as economical as the triple or quadruple compound. I am an advocate of high pressures and multiple compounds, the number of cylinders through which the steam is to be expanded being governed by the pressure.

In the proportioning of cylinders for given pressures there is great variety in practice. In the case of compound engines, a very common practice is to make the proportions of the high to the low pressure cylinders as one to four; this practice has prevailed for a great many years, and during this time boiler pressures have risen from 80lbs. to 120lbs., and even, in some cases, to 160lbs., the same proportion of 1 to 4 being retained. I contend that this cannot be right, but that there must be some distinct connection between the working pressure and the proportions of the cylinder areas through which that steam has to work.

Of all the important parts forming a steam engine, there is none of greater importance than the valves for the admission and eduction of the steam. Of many kinds, the "Corliss," the piston, the slide, and the drop valve, are the principal; of these the drop valve, at one time a very popular valve in this country, and still finding considerable favour on the continent, may be passed over, as it is now very seldom used in this district; of the three others, the "Corliss," since its introduction in this untry, has become very popular, and in the minds of many is vnonym of first-class engine work.

yielding to no one in my admiration of this valve for ing cylinder, beyond this cylinder, I am of opinion

that it is not the best, but positively the worst of the three kinds mentioned. I have had the clearance spaces and the cooling surfaces calculated from the working drawings of three cylinders 21½ inches diameter, one of each kind of valve, and also of three cylinders 48 inches diameter, one of each kind, with the result that in the large cylinder the greatest clearance space, as well as the greatest surface exposed to the steam whilst doing its work in the cylinder, is taken by the "Corliss" valve, the piston valve comes next, and the slide valve the least.

	Area through port.	Contents of clearance space.	Cooling Surface.
	Square ins.	Cubic ins.	Square ins.
21½in. Corliss cylinder. Steam	28½		
Exhaust	44½	608	858
21½in. piston valve cylinder ..	42½	782	793
21½in. slide valve cylinder	40½	661	609
48in. Corliss cylinder. Steam	152		
Exhaust	240	6,571	4,048
48in. piston valve cylinder	232	6,128	3,138
48in. slide valve cylinder	186	4,045	2,368

The cylinders, from which the above figures are calculated, were each designed at different dates, and each, at the time, was intended to be the best of its kind, and, in no sense have they been designed to compete one with the other.

The slide valve, whilst having the most favourable conditions for economy, has its advantages in this respect neutralized by its great frictional load, but this is not a sufficient disadvantage to prevent its use in excess of all other valves.

One advantage claimed by many for the "Corliss" valve as against the piston or slide valve, is its readiness of adjustment, and its easy arrangement for varying the point of cut-off, so as to equalize the load in the several cylinders. For varying loads

this would be an argument of weight, if it was of any service. In the great majority of cases an engine is designed for a certain load, which may be termed its economical load, and from which load it does not materially vary. For these there is no great difficulty in designing the non-variable valve to give the proper point of cut-off for practically equal loads in each cylinder, and for those engines designed for one load, and which may have to run for some considerable time with a different load, a variable throw eccentric can be applied which fully meets the case, but every engineer knows that, whilst it may be theoretically correct that each cylinder should do equal work, a considerable variation may be allowed without having any appreciable effect either on the economy or the working results.

Having given the matter most careful consideration, I, some years ago, came to the conclusion that with Corliss valves to the high pressure cylinder, and piston valves to the following cylinders, a combination so formed would give better results all round than any other arrangement, and to-day, with the accumulated experience of several years, I am perfectly satisfied that my conclusion is correct.

Of all the anatomy of the steam engine, next to valves and valve gear, pistons have received the most attention of inventors and engineers.

Many of the ideas of our forefathers, in the construction of pistons, may appear to us to be absurd, but it is from some of these absurd ideas that the modern piston has been evolved. The present-day pistons are of two generic types, one in which the rings are pressed against the walls of the cylinder by internal springs, in various forms, and the other in which the essure against the walls is derived from the inherent spring e ring, the ring thus forming both ring and spring. Both es are largely used. The work a piston is called upon mple in the extreme, being to interpose a division

between the steam on the one side and the exhaust on the other, but it is very essential that this division should be steam tight, and that this tightness should be secured with the minimum of frictional pressure. There are other minor points, but the two mentioned are the essentials. I am of opinion that the latter type, known as the Ramsbottom, not only contains the essentials of a good piston but also the minor advantages necessary. If properly constructed it will be found to be steam tight against all present-day pressures, and this with a very moderate radial pressure, certainly not greater than that required for other types of piston. It also possesses the advantage of lightness, simplicity, cheapness and immunity from accident, to a greater extent than any other piston. I know that an objection to the Ramsbottom piston is made by very many engineers, on the ground that, in addition to the inherent pressure of the ring, there is added that of the steam behind the ring, as there is no provision made for preventing the steam from getting behind the rings. I readily agree that this is so, and believe that in spite of the elaborate work put into the pistons of the separate spring type, that they also admit pressure behind the rings, and, furthermore, that it is necessary that pressure should find its way behind the rings to secure the first essential of a piston, viz.: steam tightness.

In the designing or arranging of the supply pipes between boiler and engine, there are wide differences of opinion; some engineers contend that the pipes should fall from the boilers to some point as near the engines as possible, and should there have a drop or receiver pipe with a steam trap to drain the water away. Many contend, as shewn by practice, that the pipes should be large, especially if the distance between boilers and engines is considerable. Many to get quit of the water entrained in the steam, and that formed by condensation, use some of the innumerable forms of water extractors, with steam traps attached. My opinion is the opposite of what I have just

stated. I advocate that in all cases the pipes should rise from the boiler to the engine (even if this entails a vertical drop pipe at the engine end) with a sufficient rise to ensure that, when no current is passing through, the water formed by condensation will run back through the junction valve into the boiler. This may not be possible in all cases, but there are very few cases where the pipes cannot be given the necessary rise to some point very near the engine, and then drop to the valve box. Where this has to be done it is, of course, necessary to put in a drain cock or a steam trap, of these, I prefer the drain cock, as being quite as safe and more economical. On the question of size of steam pipes, I contend that it is a mistake to make them of the size generally adopted, and that it is better to err on the side of making them too small than to make them too large, and this more especially if the distance between the boiler and engine is considerable, in fact, within limits, the longer the distance the steam has to travel, the more I prefer to reduce the diameter of the pipes. This may appear to be an anomaly, but I am persuaded it is the right thing. Dry steam is an essential of economical working, and I know of no means, superheating excepted, of securing dry steam, except by preventing condensation to as great an extent as possible by reducing the surface of radiation and annihilating time. I hold that as soon as steam enters the pipe at the boiler end it should travel through the pipe at the rate of, at least, 6,000 feet per minute.

Many years ago I had occasion to investigate the cause of an epidemic of fractured cylinders. The boilers and the engines were a considerable distance apart, and, consequently, the pipes were of large diameter, the result being that the steam was avily charged with water, although the pipes were fitted with he then known arrangements for getting rid of the water. k occasion to ascertain what size of an opening was to supply the engines with steam. The two high

pressure cylinders were 24 inches diameter, running a piston speed of 528 feet per minute, the pipes being 14 inches diameter. The engines at the time were indicating 960 HP., and the actual area of the opening through the throttle valve was 12½ square inches, the boiler pressure being 80lbs., the steam passing through the valve at the rate of over 19,000 feet per minute when supplying one cylinder only.

I do not think that, in designing the arrangement of steam pipes, either from the boiler to the engine, or of the pipes that connect the cylinders of an engine together, they receive anything like adequate attention, no special care seems to be taken to keep them free from places for the lodgment of water. It is a very common, almost universal, practice to make the main range of pipes across a battery of boilers larger than the branch pipes, and yet the branch pipes enter the larger range on the centre line, so that in this case there is a lodgment of water on the lower surface of the main pipe equal to half the difference in the diameter between the main range and its branches. Again in the designing of valve boxes, especially of the slide valve type, almost invariably the distance below the bottom edge of the port is a reservoir of water. In engines fitted with steam reservoirs between the cylinders, how many of these are designed to avoid the lodgment of water? Is it not a fact that not infrequently nearly half the capacity of the steam chamber is a water chamber, which gradually fills with water as the result of condensation. It will, of course, be said that all these places are fitted with cocks which will clear them of water. I am free to admit that they are, but, except at times when the engines are stopped, these cocks are closed, or if they are not closed they are blowing steam as well as water, and the remedy is quite as bad as the disease.

Steam chambers are occasionally found in the range of pipes between the boilers and engines, but are generally applied in the

pipes between the cylinders of compound side by side engines. I am not quite sure what is expected from the application in either case, but, whatever is expected, I have an opinion that they are detrimental to economy wherever placed, and where due attention has been paid to keeping them free from water. The only condition that I can imagine calling for the application of a steam chamber, is that of a four-cylinder triple expansion engine, where the intermediate cylinder works tandem with one of the low pressures. In this case it may conceivably be advisable to apply one for the purpose of holding a supply of steam for the low pressure cylinder not tandem with the intermediate, but, in my opinion, even in such a case, the steam chamber will do more harm than good. To remedy the evils of the steam chamber, as generally applied, it is the practice with some engineers to fit the steam chambers with jackets, or with a system of circulating pipes, for the purpose of re-heating or drying the steam in its passage through. Are these of any service? I hold that they are not of any practical service, as steam takes up heat very slowly, and this, taken in conjunction with the infinitesimal time that each cylinder volume remains in the steam chamber, and the restricted heating surface that can be practically applied, makes it, to my mind, that the result is not commensurate with the cost:—On this line of reasoning it may be argued that steam jacketting is of no service, but for steam jacketting the analogy does not apply. Steam jacketting, as I understand it, is not so much for the purpose of re-heating the steam in the cylinders, as for drying the surface of the metal exposed to the action of the team, and so preventing condensation taking place. I believe m jacketting to be of service when the highest economy is aimed at, and ought to be more generally carried out. at stumbling block in the way is, no doubt, the of fuel in this immediate district, which has led so

many engineers to say that the saving is not worth the expense, and, consequently, they do not advise it to their customers. I believe that this is a short-sighted policy, and is one factor in the argument that English engineers are being left behind in markets that were once their own.

DISCUSSION.

The PRESIDENT (Mr. Henry Webb) remarked that they had with them that evening representatives from the United States of America, and from the far East. What an illustration this of progress, how little the world is! Here at an ordinary meeting of the Manchester Engineers, without any arrangement, promiscuously, two persons, the one from the West and the other from the East, came and asked to join in our proceedings. He referred to Mr. Bullard, of Bridgeport, Connecticut, and Mr. Hyasi, of Japan. He believed that England, America, and Japan were destined to become much closer friends than at present. Of course we regarded Americans as brothers, not friends; they came from the same stock, read the same literature, love the same Bible, and worship the same God. As for Japan, Englishmen had watched with interest the marvellous progress made by that nation, and regarded with the highest esteem the position they had attained.

Mr. BULLARD said that he had had the pleasure of welcoming more than one Englishman at their works in America. There was in the hearts of all Americans a warm feeling for a good honest Englishman, and he thought this feeling was reciprocated, as he had been the recipient of many courtesies and favours in this country, some of which were quite unexpected. He hoped that in the providence of God they might all live to

fulfil the mission for which he had sent them there and do it as friends and brothers. He thanked them for their kind welcome.

Mr. E. Adams, speaking on behalf of Mr. Hyasi, thanked the members heartily for the kind reception they had given him. In reference to the President's remarks, he might say that in Japan also they were looking forward to the time when the three nations would stand together, to further the progress of the engineering and other industries.

Mr. James Saxon said with regard to types of engines, although Mr. Hodgson passed over the beam engine as almost extinct, there were new beam engines actually being put in at the present time, and consequently they could not be treated as an extinct species. He believed with the author that the inverted vertical was the engine of the future. The beam engine certainly had its advantages; its parts were freely accessible, all the pumps, &c., were directly connected, but the disadvantages were great. Amongst these were the cost of the engine, due to its large size, the fact that it could not be run at quick speeds, the costly foundations in the engine house, and the great expense incurred in the event of a breakdown. In his opinion the horizontal engine stood next to the inverted vertical. Its parts were easily accessible, and easy to adjust. The working was facilitated by the long connecting rod, as against that usually adopted in the inverted vertical engine, and it was economical from the point of view of repairs and breakdowns. The horizontal engine was also very firm and solid. Of course it had its disadvantages. It occupied a greater floor space, and necessitated more expense for engine house and foundations. inverted vertical engine had the advantage in that it a less floor space, cost less for foundations and engine owing to it being often run at a quick speed, there

was more regularity of turning, whilst with its reduced surfaces there was, no doubt, somewhat diminished friction. It was, however, not quite so clean an engine as the horizontal, whilst there was also the difficulty in obtaining a long connecting rod which might make it run more sweetly and safely, without interfering with the stability of the engine. He supposed most engineers were in agreement with the author that multiple compounding was the best system, and if there were people opposed to such a principle, or prejudiced against it, he thought they were mostly customers who had not studied the question, and not engineers themselves.

As to proportions of cylinders, the author was no doubt posing as a humourist when he said it was a common practice to make the proportion of the high-pressure and low-pressure cylinders as one to four, irrespective of the boiler pressure. He did not believe the author could name a competent engineer—consulting or manufacturing—or even a respectable firm, who adopted the above-named practice without variation.

As to pistons he did not think the perfect type had yet been invented. There were no doubt thousands working with complete satisfaction to the persons using them, but at the same time they had not convinced other people that they were the perfect type they had been seeking. The conditions of perfection in a piston were stringent. There must be a perfect fit, and tightness must be maintained under all conditions, even after considerable wear; the pistons must run easily and not wear either themselves or the cylinders unduly. Now a piston that fulfilled all those conditions must be a very good one indeed. He must say there were some very good types on the market. He could not go so far as to say, like Mr. Hodgson, that the Ramsbottom type was far and away the best, because there were some very good adjustable pistons that might really be classed alongside it, at any rate.

With respect to steam pipes he thought they should avoid sharp corners and bends. He also held that the velocity of the steam in the pipes may be greater for a slow speed than for a high-speed engine; consequently, the pipes should be slightly larger for the quick-speed engine on account of the additional accelerated flow of steam required for the quick-running piston. The engines at the present time giving the best results were undoubtedly those where the connecting pipes and valve chests were as large as possible, to allow a free flow of steam. He agreed with the author of the paper that the pipes should fall and drain towards the boiler as far as possible. If they drained towards the engine they must be exceedingly well trapped, or there would be an accumulation of water in the cylinders that would be likely to lead to a breakdown, and even if the pipes drained towards the boiler care should be taken to prevent any drop where a lodgment of condensed water could remain, which would be prejudicial to economy. One important feature in a steam engine, with regard to the pipes and passages, was to get the exhaust steam passage away from the body of the cylinder. Some engineers appeared to think it was an unavoidable necessity that the exhaust passage should extend a quarter or even half round the cylinder. In this way the exhaust steam was heated at the expense of the live steam in the cylinder, after it had actually done its work, and could be dispensed with.

He thought it was probably owing to the many defective ways in which steam jackets had been designed in the past that they had not met with so much favour. There had been errors of construction which had led to very poor results. A few days ago he had met with a portion of a cylinder supposed be steam jacketed, but in which the casting had been made h a way that the steam jacket was of no use whatever. ere were hollow places for condensed water to lodge et was converted into a positive condenser instead of

a heater. He believed, however, that the steam jacket was one of the best adjuncts for a steam engine in the way of economy, and he was sure it would be more largely adopted in the future than it had been in the past.

Mr. Chas. Day said the author gave as one of his reasons for preferring vertical engines that they were more economical. His own experience was rather the reverse. Looking over all the test records he could find, he certainly met with the majority of the best results in horizontal engines. One explanation of this was, he thought, that with horizontal engines and Corliss valves, there was across the cylinder bottom at each end a port that gave splendid drainage, and the cylinder at every stroke was thoroughly cleared of the water formed by condensation on the metalic surfaces. That could not be said of the vertical engine, for the upper portion of the cylinder, as the water could not be emptied until the piston reached the top, when probably it found the exhaust closed. Other advantages of the horizontal engine were accessibility, cleanliness, freedom from vibration of foundations, etc.

From the author's remarks he inferred that Mr. Hodgson thought the adaptability of the Corliss valve for the governing cylinder was its only good point. The drainage quality of this valve however, as already stated, was an important one in the case of horizontal engines, and the Corliss valve was worth putting in if for that reason alone. In the case of slide valves there was not only very heavy friction, but as the spindle was some little distance from the slide valve face, it tended to rock the valve, and consequently the valve faces generally wore convex, and became leaky. On the other hand Corliss valves wore tighter with time, as they are worked by twisting forces, and can follow out any wear which occurs.

The author recommended that pipes should drain towards the boiler. Personally he should advise the reverse. If they drained towards the boiler and were connected with a range of boilers, one of which was shut down, there would be a lodgment of water on the top of the junction valve, and when they came to start that boiler, if the junction valve was opened without the pipes having been previously thoroughly drained, there was danger of bursting the pipes by the water being shot forward, and further there was a danger in the drainage itself, as had been shown by many accidents which had been investigated by the Board of Trade. If however they took the junction valve up, and had a fall from the junction valve right away to the engine stop valve, putting a simple form of separator at the stop valve, any water that collected did so in the separator, which was the proper place to receive it, and this method applied whether the water was the result of condensation on the surfaces of the pipes or priming.

Mr. W. Ingham said he could quite endorse what Mr. Hodgson had said as to the difficulty which many engineers seemed to have in determining the best ratio of cylinders, especially in the case of compound non-condensing engines. Within the last few weeks his attention had been called to some indicator diagrams, from a pair of compound non-condensing engines, at an electric power station, by makers of the highest repute, which were exceedingly ill-designed, both as regards the size for the power required and the ratio of cylinders; the high pressure cylinder itself being almost large enough for the maximum power required. He had plotted out many years ago the results of some actual trials of a non-condensing engine, working at different pressures and with different points of cut-off, and the curves showing the water consumption were given on the diagram opposite page. They would see from these curves that the

water consumption was the lowest at certain points of cut-off, which of course was earliest at the higher pressures. The most remarkable feature about these experiments however, was that in each case the point of cut-off which gave the lowest water consumption was that which gave about the same final pressure, whatever the initial pressure was, viz., from 18¾ to 19lb. absolute, or about 3¾ or 4lb. above atmosphere.

If one or two fundamental principles were only kept clearly in mind, there should be no difficulty in determining the best cylinder ratio for any compound engine, whether condensing or non-condensing.

The price they paid for their power was shown by the amount of steam thrown away at the end of the piston's stroke, and this

DIAGRAM OF WATER CONSUMPTION IN LBS PER I.H.P. PER HOUR.

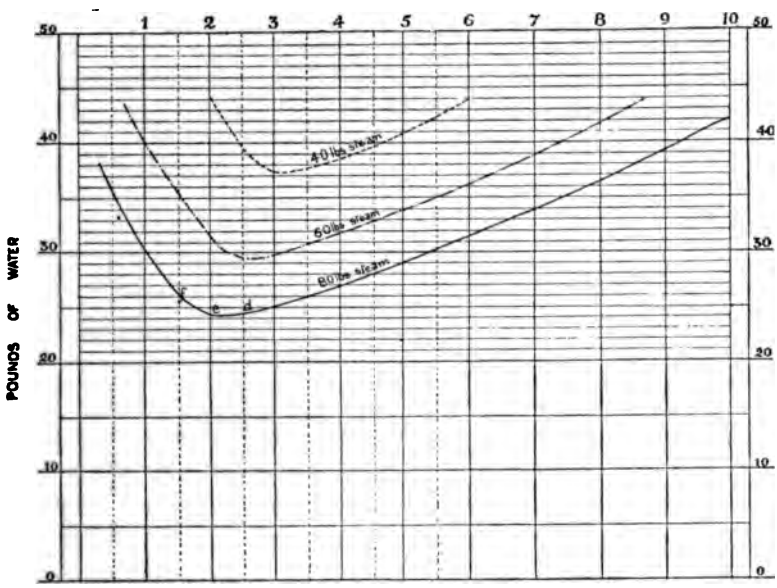

-------- Curve for Steam at 40lbs pressure
——— Dº " do 60lbs "
——— Dº " do 80lbs. "

was measured by the terminal pressure; whilst the power they got out of our engine was shown by the mean effective pressure, so that the greater the mean effective pressure they could obtain for a certain final pressure and the greater the economy of the engine. This was the reason why high pressure steam was so much more economical than steam of low pressure, because whatever might be the initial pressure, they could not work their steam lower than a certain point, in other words, the remnant in each case would be the same. Now if they knew the final pressure to which it was best to work down the steam, and which seemed to be about 19lbs. absolute in a non-condensing engine, and say 8½ absolute in a condensing engine, and knew also the most advantageous point of cut-off, the cylinder ratio could be at once determined; because the ratio r was the initial pressure P, multiplied by the proportion of the stroke through which the steam was admitted in the first or high-pressure cylinder (say n), and divided by the terminal pressure t. Or expressed in a simple formula we have, as shown on the diagram

$$r = \frac{P \times n}{t}$$

where r = cylinder ratio,

P = initial pressure (absolute),

n = fraction of stroke through which steam is admitted.

It was well known that the continued gain from expansion, due to early cut-off in an unjacketed cylinder, after a certain point has been reached, is found in practice to be more than counterbalanced by losses in other directions, cylinder condensation, &c., and it is usually not advantageous to cut off much earlier than half stroke in the cylinder of an unjacketed compound engine. He had found from an extended experience that a little less than half stroke seemed to give about the best result in most cases, and adopting a cut-off of ·45 the piston's

stroke, or say $4\frac{1}{2}$ tenths, and a final pressure in low pressure cylinder of $10\frac{1}{2}$lbs., theoretically (which would allow of a loss of 2lbs. in practice, thus bringing the final pressure shown on the indicator diagram to $8\frac{1}{2}$lbs.) he had arrived at a simple arithmetical rule deduced from the above general rule, as under:

$$r = \frac{P \times \cdot 45}{10 \cdot 5} \text{ or } = \frac{P \times 4\frac{1}{2}}{105}$$

This rule had been published and very extensively adopted with good results, and assuming a best terminal pressure of 19lbs. might be modified for compound non-condensing engines, as follows:

$$r = \frac{P \times 4\frac{1}{2}}{195}$$

Cylinders proportioned to each other as above, gave a fairly equal distribution of load with a cut off also at about half stroke in the low pressure cylinder, but of course the apportioning of the loads on each cylinder admitted of considerable modification, by altering the cut-off on low-pressure cylinder, which would increase or reduce the back pressure on the first cylinder, according as the cut-off was early or late in the second cylinder.

Mr. J. Parry said that cylinder ratios could not be settled in quite the easy manner Mr. Ingham suggested. There must be some regard to the range of temperature of the steam in each cylinder. The whole question was a very complicated one.

Mr. Andrew Bolton said that a fixed rule, such as Mr. Ingham advocated, was not altogether advisable. Take for instance a side-by-side compound engine, working at say 140lbs. boiler pressure, and expanding its steam to 7 or 8lbs. below atmosphere. If such an engine had cylinders based on Mr. Ingham's rule, the difference between the initial pressures on the crank pins would be very great. In his opinion these

pressures ought to be considered and a ratio adopted that would tend to equalise them; of course a lower ratio would mean a larger HP cylinder, but he saw no objection to this if within reasonable limits, and the terminal pressure did not fall below the back pressure in that cylinder.

Mr. ALFRED SAXON said the author might have referred to the condensing arrangements in connection with the steam engines, of which there were so many types, including surface condensers, jet condensers, evaporative condensers, and independent condenser plant.

As to types of engines he was pretty much of the same opinion as the author, except perhaps as to one point. This was as to the cost of vertical engines. So far as his firm had been able to prove it, vertical engines of the larger types were more costly in manufacture than horizontal engines of the larger sizes. He did not, however, know how it would work out with foundations, engine house, &c.

As to proportions of cylinders he could assure the author that his firm was not tied to the 4 to 1 proportion at any pressure for compound engines.

With regard to the admission and eduction valves of a steam engine, the author considered the Corliss the best for the governing cylinder. He (the speaker) was prepared to go further, despite the figures given in the tables, which gave no information as to whether the cylinders had the same stroke, or were arranged to run at the same piston speed, or whether they compared exactly in every detail, upon which points the size of ports, &c., depended. Corliss valves, he held, could be made with as little clearance as either slide or piston valves.

A friend had given him particulars of a special inverted vertical Corliss compound winding engine, now being made in

Lancashire, in which the valves were arranged in the cylinder ends, the clearances of the pistons were ¼in. at each end, and preparations were cast on the pistons for working into the ports. The clearance space in the high pressure cylinder was 1·94 % and in the low pressure 1·24 %.

Particulars of Clearance Spaces, &c., for Vertical Corliss Winding Engines.

Cylinders 31in. and 48in. × 5ft. 0in. × 65 revs.—120lbs. B.P.

REMARKS.	H. P. Cyl.	L. P. Cyl.
Clearance space in cubic inches.....	495in.	1355in.
Do. do. per centage of stroke	1·094 %	1·242 %
Do. surface in square inches	2498in.	5787in.
Do. do. do. feet.....	17·35ft.	40ft.
Area through steam ports, square inches	69in.	176in.
Do. exhaust do. do.	81in.	198in.
Clearance between piston and end of Cylinder at each end of stroke	¼in.	¼in.
Velocity of steam through ports in feet per sec.	118	111
Do. exhaust do. do.	101	99

He was of much the same opinion as the author respecting the Ramsbottom piston. He had only a short time back had an opportunity of testing both a Ramsbottom and a patent adjustable piston, and the former stood the trial the best of the two. Properly made the Ramsbottom would meet all requirements.

He also agreed as to draining pipes back to the boiler, but he did not advocate small pipes. Many engineers could tell of cases where they had to change small pipes for larger ones, particularly when the engines were loaded up to their capacity. When the engine was not well loaded there was not much in it. He held that the supply pipes of a steam engine should be of such a size—and no larger—as to allow of a free flow of steam

to the engine cylinder or cylinders, without fluctuation or fall of pressure in those supply pipes.

He had found a distinct advantage in receivers for compound and triple expansion engines, particularly in the case of two cylinder compounds, and four cylinder triples. He might also remark that if there was a rise in the back pressure line of a compound or multiple compound engine diagram, it was a sign that the receiver capacity was insufficient.

Mr. T. Walton referred to the working of some large inverted vertical engines running 80 revolutions per minute, with 31in. high and 52in. low pressure cylinders, 1,300 HP. These engines had proved very economical in maintenance, easy running, nicely balanced, free from vibration, and very satisfactory.

As to cleanliness, they could not have speed and an absence of dirt, for high speed meant plenty of lubricant, which tended to give the vertical engine a dirty appearance, but with the same speed of rotation the horizontal engine was the dirtier.

The Corliss valve was a good valve for other cylinders as well as the governing cylinder; the piston and slide valve undoubtedly had their advantages, and could be still further improved by lowering the ports so as to efficiently drain the cylinder.

For simplicity he thought the Ramsbottom piston the best, but it was necessary that the Ramsbottom ring should be made in a proper manner. If after the requisite amount was cut out of the ring for spring, clearance and expansion, the ring be then closed to a fraction over the cylinder diameter, and cramped on to a lathe face plate, and then finished to exact cylinder diameter, it would be a perfect circular fit in the cylinder, and ould be steam tight with the minimum of friction.

e might mention a case where two high pressure cylinders same pair of McNaughted beam engines) 36½in. diameter

× 3ft. 9in. stroke, 90lbs. pressure, both cylinders were bored out and fitted with new pistons; one cylinder was fitted with a Ramsbottom and the other with a spring piston, by a firm of piston specialists; he found both pistons two years afterwards perfectly steam tight at various parts of the stroke. He tested the pistons by spragging the engine and putting steam under the piston, and by testing on the dead centres; although both pistons were steam tight, yet there was a great difference in the appearance of the cylinders, the one fitted with Ramsbottom piston showed all the traverse marks of boring tools, the cylinder fitted with the spring piston was worn quite smooth, although fed with same quality and quantity of lubricant. In regard to the friction of the pistons, on several occasions he took out crank pin steps to examine bearing, the connecting rods having box ends it was necessary to raise and lower the beam to examine all round the pin. The engine fitted with Ramsbottom piston, three men could lift or pull down the connecting rod, including the beam and pistons, but the engine fitted with spring piston, a pair of blocks were required to move the engine.

He did not like Mr. Hodgson's plan of draining pipes to the boilers; there was a risk in draining to a standing boiler. In his opinion and experience, if water got into the steam pipe it almost invariably went forward to the engine; if it was preventable, the best way he had found was to run a horizontal main into, and about 3ft. from the bottom of a vertical rising main, the bottom forming a receiver for dirt and water; he has had occasion to have the bottom flange taken off the foot of vertical main, owing to the steam traps and drains being choked, and he has invariably found 2in. to 4in. of scale, scum, joint material, &c., resting on the blank flange at the foot of vertical main, which would otherwise have gone forward to the engine.

The size of steam mains was a very complex question, considering the loss from radiation the pipes should be small in

diameter, but if the full boiler pressure was to be taken advantage off, either for expansive working or for obtaining full power of engines, then the mains will have to have a larger capacity, even then boiler pressure is not always obtainable. He referred to a plant of five boilers working at 160lbs. pressure, developing 2,200 HP; the steam is delivered into an 18in. main, then through 30ft. of 14in. pipe, up to a slide stop valve 10in. square, fixed on a 10in. diameter branch on Corliss cylinder. Area through Corliss valve at point of trip 50 square inches, the 14in. main being three times greater in area than the valve, he found a loss of 6 and 7lbs. per indicator between boilers and Corliss valve chest, though the loss between valve chest and cylinder is not appreciable.

Mr. Geo. Dixon (visitor) said if they adopted a triple expansion inverted vertical engine there was a good deal of complication. If they placed the cylinders side by side it meant an expensive crank shaft. In horizontal engines averaging four cylinders tandem, one with the other, they had only an ordinary crank shaft. If they made a vertical engine into a tandem, a cumbrous and unsatisfactory arrangement was the result.

In India, where coal was dear, the best firms were now putting down compound engines; this applied to the Calcutta jute trade, and the Bombay cotton trade. He had particulars of results both from India and elsewhere, which were in favour of the compound. In one case a compound engine at 180lbs. boiler pressure, but with a superheat of 140 degrees, gave a result of 11·85lbs. and 12lbs. of water on two tests. The triple engine was not so good in respect of mechanical efficiency as 'he compound. In fact he thought there was a good case for pounds as against triples, at equal boiler pressures. In a nade a few months ago, compound engines at 115 to 120lbs. e gave a dry steam consumption of about 14lbs., and

total water consumption of only just over 14½lbs. The engines were taken just as they stood.

Corliss valves could certainly be made with as little clearance as any other type, especially if all the valves were placed in the covers. In horizontal engines, Corliss valves, having the exhaust at the bottom, thoroughly drained the cylinder, which conduced to dry surfaces and economy. They also enabled a proper amount of compression to be obtained, which not only contributed to economy, but often tended to make the engine run silently.

He liked to place the Ramsbottom rings within a separate ring, so that instead of having to take the piston off they could take off the additional ring, and obtain a duplicate. They would also maintain a greater average efficiency throughout the year than with other types of pistons.

He rather inclined to the underside than the overside with regard to the size of steam pipes, but would like the addition of a separator near the engine, and also a receiver. By this means the difficulty of the steam not being at its work was overcome, as the reserve was close at hand.

As to arranging receivers between cylinders he did not think the question of economy was very much affected, it depended on where the cranks were placed. Most people liked to place them at right angles in compound side by side engines, he had placed them in several cases nearly opposite to one another, and when they were in that position there was scarcely any necessity for a receiver.

His firm jacketed their engines and receivers as thoroughly as circumstances permitted. From the point of view of economy they could not have too thorough steam jacketing. He was also a strong advocate of superheating, experience having shown that results obtained by it were generally satisfactory.

Mr. JOHN TAYLOR said that a great deal of the water found in steam pipes was described as condensation, whereas it was really a kind of priming that had taken place. The old "umbrella" device might be adopted to prevent this. The question was not altogether one of proportioning the pipes in order to ensure efficient working of the engines, but means should also be taken to prevent what is called "priming," and the devices applicable for this purpose were very easy to arrange when thoroughly understood.

Mr. J. MITTON said the author had remarked that the only condition calling for the application of a steam chamber was a four cylinder triple expansion engine, where the intermediate cylinder worked tandem with one of the low pressures. To his mind the above condition was the most marked case in which a receiver could be avoided.

The steam is transferred from the intermediate cylinder to the two low pressure cylinders with less change of volume, temperature, and pressure, than with any other arrangement of cylinders, as the intermediate cylinder exhausts the entire stroke, giving half in succession to each low pressure cylinder.

A receiver is required wherever the transfer of steam from one cylinder to another causes a great change of pressure, volume and temperature, as is the case with cross compound engines, and also between the high pressure and intermediate cylinders of a four cylinder triple expansion engine.

The following correspondence was submitted:—

Mr. JOHN WATSON wrote: On one or two points touched upon 'n his paper Mr. Hodgson expresses views which I feel certain ny engineers will not agree with.

'o not think there will be found many in the present day ll argue that with very high steam pressures a triple or

quadruple compound will not do the same work with less steam than a two cylinder compound will do it, but it does not follow that such engines are the most economical under all conditions, and it would not be difficult to find instances where it would pay better to put down a two cylinder compound to do the work, notwithstanding that the consumption of steam per indicated HP may be somewhat greater than if a triple or quadruple compound were adopted.

Why Mr. Hodgson prefers valves other than Corliss for all the cylinders, except the first of a compound or multiple compound engine, is not made very clear in the paper, the table of relative clearance spaces is a little misleading, 6,571 cubic inches in a 48in. cylinder is excessive, and if the area of port in both cases were equal the Corliss valve ought to have the advantage of the slide valve in this respect, and the ease with which the valves of Corliss cylinders can be worked, particularly when the exhaust valves are operated by a wrist plate, combined with their small liability to leakage, is, in the opinion of the writer, a strong argument in favour of their use for all cylinders.

Mr. Hodgson might have referred to the various methods of working the exhaust valves of Corliss cylinders, and the merits of the wrist plate, or lost arc movement, used by most of the pioneer firms of Corliss engineers in this country and America, as against the plain reciprocating movement, might have been discussed with advantage.

I fear engineers generally will disagree with him in his views regarding the drainage of steam pipes. It is very difficult to get pipes to drain towards the boilers; even when there is no steam passing to the engine, there is always a slight current in that direction, owing to the condensation in the pipes, and a very steep declivity is required to induce water to travel against this

current, consequently unless the pipe is very short it is generally inconvenient to arrange pipes in this way.

In cases where the length of pipe from boilers to engine is considerable, and the fall is towards the engine, with a receiver and a steam trap at that end, it is generally found when the engine is stopped, and all is quiescent, that there is very little discharge from the trap, although the full boiler pressure is maintained in the pipe, but the moment the engine is started several violent discharges will occur in rapid succession, demonstrating that notwithstanding the declivity of the pipe a quantity of water lies in it, and does not find its way to the trap till the steam being set in motion brings it along with it, and if water does not readily drain towards the trap when the declivity is *away from* the source of supply it is not reasonable to expect it will do so when the declivity is *towards* it.

Mr. Joseph Butterworth wrote: It is impossible to deal with every point in engine design and leave time for discussion, but the author must be complimented on his choice of those most suitable for profitable criticism.

I thoroughly agree with him respecting *small steam pipes* for constant loads, as the "head" or difference in pressure due to a velocity of 6,000 feet per minute is less than ½lb. per square inch (neglecting all pipe friction and assuming dry steam), but the "head" increases as the *square of the velocity*, so that an error in the size of pipe, when working near the limits, may have serious consequences.

Jacketing cylinders *and* receivers has been proved beneficial at Owens and other colleges, where triple expansion engines are specially arranged to test these points.

It is of course preferable to drain the jackets to the boiler if sufficient fall is available, but a drain tap to the air is too crude, as the rate of condensation and amount of water entrained in

the steam constantly varies, and manifestly any appliance which will automatically discharge the water, and that only, must be preferable to steam blowing or water-logged jackets.

Piston Rings. There is much to be said for plain cast iron rings on account of their simplicity, but land engineers are behind the times in this respect, as marine engineers are making their rings last twice as long as formerly at high pressures, by making the depth of the ring into the piston three times Ramsbottom's standard, but keeping the width against the cylinder the same as or less than standard.

It is however impossible to make a plain ring that will press equally to the cylinder during all periods of its life, as when, say half worn, it will press most at two points of the circumference at right angles to the joint, and scarcely touch at the joint and the part opposite.

The fault of most types of spring supported rings is the excessive pressure applied. Given an equal pressure on the cylinder to that exerted by a plain ring and no more, the result must be better in the end if the spring presses equally all round, for the reasons above stated.

Mr. Hodgson, in replying to Mr. J. Saxon, said there could be no objection raised against the vertical engine on the question of working the pumps, as by the introduction of levers connected to the crosshead, the engine was in as good a position for working them as the beam engine. It may not be expedient to make the stroke of a vertical engine as long as in the case of horizontals or beams, but there was no reason why the connecting rod should not be made as long as was usual in the other types of engines. With regard to the cleanliness of the engines his experience was that with proper attention to the design and construction they could be made to run as cleanly as any other; this might not be the general experience, but he

could show engines at work that bore out his statement. As to firmness and solidity, his firm had constructed a three crank vertical engine, 51in. stroke, running at 104 revolutions per minute, and the vibration at a point about 28 feet from the floor level, is under $\frac{1}{16}$th of an inch. As to the question compound versus triple, he might say that he converted a pair of side by side horizontal engines into triples, by adding another engine alongside, the boiler pressure being only 100lbs., and the saving averaged 11 %.

He might say that it was a positive fact that some engineers to-day fixed upon the proportion of cylinders for compound engines at 4 to 1, irrespective of pressure, and he could mention several cases of having altered engines when this proportion had prevailed. He knew of a case of practically new engines where this proportion was adopted, although the boiler pressure was 160lbs.

He adopted the Ramsbottom piston, with cast iron rings, 35 years ago, and had found no reason to change from the opinion that he then formed of it.

On the question of velocity of steam travelling in the pipes, having fixed upon the speed at which it should travel, it is a matter of no moment whether the engine is a fast or slow running one, the piston speed into the fixed-upon velocity will settle the size of the pipes.

In the slide valve box of the usual type there was certainly only a thickness of metal between the steam and the exhaust, and therefore the exhaust robbed the steam of some temperature, but this was merely bad design; a separation could easily be effected. Engineers, in his opinion, in many cases were not designing up to the knowledge they now possessed, they took things as they were in the past, rather than attempt to meet esent day requirements.

Steam jackets ought not to be condemned on account of bad design. If they were not properly designed they ought to be; where they had failed in ninety-nine cases out of a hundred it would be found to be due to bad design.

Mr. Day advocated the horizontal engine on the ground of economy; principally for the reason that good drainage was secured owing to the exhaust valves being placed at the bottom of the cylinder. He had alluded to the difficulty of the drainage in vertical engines at the top end, owing to the exhaust valves being shut at the time the piston arrives at the top. There were means of overcoming that difficulty. He had made a considerable number of vertical engines, and had never put in a drain cock at the top of the cylinder. With a little scheming arrangements could be made for draining the top of the piston of vertical engines, and practically freeing them from water. As to the bottom end there was no difficulty, the exhaust being so arranged that whatever water might be formed was swept out. The piston valve or any other type could be arranged to drain quite as effectively as the Corliss, either for vertical or horizontal engines. Mr. Day stated that Corliss valves always wear themselves steam tight. This might be so, but he could not conceive how a valve that must wear smaller working in a chamber that must wear larger, with a tendency to roll rather than turn, can wear itself tight. To his mind the piston valve was the only valve that could be depended upon for continuity of steam tightness.

He was surprised that anyone should find a difficulty owing to water lodging in steam pipes, where they rise from the boilers, it was easy to arrange that it should pass away automatically. In a battery of say half a dozen boilers, if the lowest part of the several branch pipes or junction valves were coupled together by a small pipe on the engine side of the junction valve, without any cocks, there would be no lodgment of water in the pipes

connected to the boiler that may be shut off. He was led to design this arrangement, owing to a case of water hammering, when he happened to be rather nearer the fractured valve than was pleasant, and had found the arrangement to be effectual.

He heartily condemned separators, to his mind they being of no benefit whenever. In his opinion the condition of saturated steam was more like that of a slight fog than anything else, and the water was so commingled with the steam that separation could only be effected by heat. Superheating was, he thought, the right thing to adopt.

With regard to the point of cut off and the number of expansions as being the most effective. He had a Corliss gear that admitted of a large range in the point of cut off, reaching from zero to $\frac{7}{8}$ths of the stroke. He had fixed upon the point of cut off being at $\frac{4}{10}$ths in the high pressure cylinder, and the terminal pressure at 5lbs. below the atmosphere in the low pressure, whatever the working pressure may be; having these two fixed points, it was easy to arrange what the proportions of the cylinders require to be.

With regard to the fall of temperature in the cylinders, as a rule the greatest fall took place in the high pressure cylinder, and as this is the smallest cylinder, it could better afford it than the following cylinders.

Mr. Bolton referred to the strains on the crank pins. He did not think that these varied to any considerable extent, as between one cylinder and another of a triple engine, they could afford a little variation, so long as the strength and bearing surface were well within the mark. As to the back pressure in the high pressure, this could be made pretty much as was desired, by arranging the point of cut off in the following cylinder. It would be found a good rule, as a basis, to make the contents of the following cylinder at the point of cut off equal to the volume of the preceding cylinder.

Mr. A. Saxon thought that something might have been said about condensing apparatus. He did write a paragraph on the subject, and struck it out as containing nothing that was controversial. As to the question of surface versus jet condensing, that was purely a question of the quality of the water, surface condensing was necessary for salt and bad water; as to other types, such as evaporative condensers, waterfall condensers, &c., these were simply children of circumstances.

As to the cost of a vertical engine compared with an horizontal, if they took into consideration the cost of foundations and engine house, he thought the vertical will be found to be the less costly engine. As an engine under like conditions, the vertical was not much more costly than the horizontal. Mr. Saxon alluded to an engine under construction, where provision was made on the faces of the piston to nearly fill the steam and exhaust ports which were located in the covers. In the case of the high pressure cylinder this attempt at reducing the clearance space might be found to be a disadvantage, without taking into consideration the cooling surface, and in the low pressure whatever might be gained by reducing clearance will be neutralized by the increased cooling surface, and whether the Corliss valve, in any form, can be made to have less clearance space than other types of valve, it could not be made to have less cooling surface, which he held to be of equal, if not greater, moment than space. The figures given in the paper do not include piston clearances or surfaces, in other words they do not include anything that was common to each of the three types.

With respect to the loss of some pressure through using small steam pipes, he did not care much for this so long as the temperature was maintained; whatever pressure might be lost the steam was superheated to that extent, less the amount lost by radiation, which necessarily must be less with small pipes.

If they looked at the matter as a question of heat, and that steam was only the medium by which the heat in the fuel was converted into work. He thought they could agree with him that temperature was of more vital importance than pressure. Mention had been made of a case where putting in larger pipes had resulted in a saving. That was quite possible, and he could mention several cases where reducing the pipes has resulted in a saving. If an engine was very heavily loaded it might be necessary to enlarge the pipes, but the original size of pipes might have been sufficient for what the engine was originally designed to drive. Engineers should not be held responsible for requirements of which, at the time, they had no information.

Mr. Walton instanced a case of a pair of vertical engines of which he had charge, with which no complaint could be made on the score of want of cleanliness. At this point he might say that he knew that an objection was taken to the vertical engine on the ground of its being a sloppy dirty engine, this objection has been stated to him on many occasions. The best answer he could give to this was to show them engines working under ordinary conditions, that were as free from this objection as any type of engine; the responsibility of a dirty engine lay with the designer. He was quite prepared to supply an engine in which the most fastidious could have no fault to find on this score. Mr. Walton also instanced a pair of sister beam engines, the cylinders of one engine were fitted with a Ramsbottom piston, the corresponding cylinder of the other engine was fitted with a piston of the coil spring type, the evidence he gives is largely in favour of the former type.

Mr. George Dixon somewhat condemned the three crank vertical engine on the ground of the costly crankshaft, and instanced the case of a compound engine working with 180lbs. pressure of superheated steam, using 11·85lbs. and 12lbs. of steam

per indicated HP per hour, and of another compound working with 115lbs. pressure on a consumption of 14lbs. of dry steam. He was quite prepared to admit that the results instanced were very good. His firm had advice of a set of triple vertical engines they sent to India, that were using, as the average of a series of trials, 12·6lbs. of ordinary saturated steam. These engines were not steam jacketed, nor was there any superheating or re-heating of the steam, the boiler pressure in this case was 160lbs. per square inch, and the coal consumption, as supplied to us by the proprietors of the mill, was 1·18lbs. of English coal. They have also a set of tripples at work in Belfast using 180lbs. pressure, no jackets or superheating, the consumption of coal, year in and year out, being 1·25lbs. In this case he believed the coal was Scotch, but on this point he could not be sure. The system of jacketing cylinders by the live steam on its way to the cylinders was one that he could not agree with, nor did it necessarily ensure that the jackets were kept free from the lodgment of water. His own practice was to circulate the steam from the boilers through the jackets and return to the boilers, the whole being a closed circuit, and by which means steam traps are dispensed with. The question of clearance and exposed surface, by the use of Corliss valves, he had previously referred to in replying to Mr. A. Saxon.

With regard to locating the Ramsbottom rings in a separate junk ring, this entailed the use of bolts, which for such a purpose he considered to be a nuisance. If the usual system of fitting pistons upon conical seats, which was unmechanical, was dispensed with, and they were fitted flat upon a collar forged on the rod, there will be no difficulty in withdrawing the piston when it was desirable to examine the rings. As to separators and receivers he had expressed his opinion in the paper, and at present he was not disposed to change that opinion. With regard to the position of cranks of compound engines, he had

fixed upon an angle of 100°, the low pressure crank leading, this, except under exceptional loads, is sufficient lead to prevent the second admission of steam, which was painfully evident with engines coupled at 90° under even ordinary loads. He was a believer in superheating the steam, but he was not at all sure that the right method of superheating had yet been put into practice or even discovered.

Mr. Mitton named a condition where he thought steam chambers were advisable. He was not at present prepared to agree that they are advisable under any conditions.

In reply to Mr. Watson he said he quite agreed that with high steam pressure there was economy in multiple compound, but that there were many instances where the economy would not pay interest on the increased cost, and this would frequently occur where the cost of fuel was low. He preferred valves other than Corliss, for all cylinders except the governing cylinder, on the ground that equally or even better results were obtained with the simpler and less costly piston or slide valve.

He thought if Mr. Watson would very carefully measure up the clearance space for each type of valve it would be found that his figures fairly represented the relative values. He, however, was much more concerned in reducing the cooling surface rather than the clearance whilst still attaching full value to keeping down the latter, especially in the low pressure cylinder.

With regard to the question of the wrist plate and reciprocating motion for working the exhaust valves he desired more to deal with general principles, and hoped that what had been read in the paper would initiate a discussion that would practically occupy all the time of the meeting, which proved to be the case. The point was one, however, which might profitably be taken up at an early opportunity.

He was quite aware that engineers generally would not agree with him on either the size or arrangement of steam pipes, but

he was nevertheless of opinion that this branch of the subject did not receive the attention that was due to the importance of the matter, and on more careful consideration he thought this view would be shared in by Mr. Watson. His experience had proved to him that a very slight incline from the boiler would allow of water draining back when the engines were stopped. This must be so, as the current due to condensation was very slight. Mr. Watson said "where the fall is towards the engine, with a receiver and a steam trap at that end, it is generally found when the engine is stopped, and all is quiescent, that there is very little discharge from the trap, although the full boiler pressure is maintained in the pipe." That being so, then as the only current was that required to make up the amount condensed, it would be so slight as to be practically inappreciable. He had a case in which there was only a rise of about 2ft. in about 180ft., in which there was neither a receiver, a trap, or even a drain cock, and in which there was a total absence of water hammering. He thought in the case mentioned by Mr. Watson, and which he had quoted, and containing the quotation "but the moment the engine is started several violent discharges will occur in rapid succession, demonstrating that notwithstanding the declivity of the pipe a quantity of water lies in it, and does not find its way to the trap till the steam being set in motion brings it along with it," proves his case that sufficient attention is not paid to the designing of the arrangements of steam pipes, as there must in this case be places in the length of pipes where water lodges.

In reply to Mr. Butterworth he was glad to find that there was someone who agreed with him on the question of steam pipes, as also in respect to the jacketing of cylinders, and the system of promoting circulation in the jackets. In regard to the question of the durability of the Ramsbottom ring, his experience was of the cast iron ring, square in section. He had

knowledge of a 38in. piston with $1\frac{1}{8}$in. square ring that was put into a beam engine cylinder 23 years ago, and which was in perfectly good condition now, and appeared to be good for another 23 years. He put four pistons on a pair of tandem horizontal engines, 23in. and 39in. diameter, and they were taken out after working over 11 years on account of tripling the engines, the wear on the rings all round was something under $\frac{1}{8}$th of an inch. These pistons were steam tight against a standing pressure right up to the end. In his opinion if these rings were properly constructed he thought it would be found that the wear was practically equal all round, such being his experience founded upon the examination of many rings.

THE MANCHESTER SEWAGE PROBLEM.
Who will solve it, the Mechanical or the Sanitary Engineer?

READ SATURDAY, 12TH NOVEMBER, 1898,

BY

MR. M. INGRAM, M. SAN. INST.,

(MANCHESTER).

The subject which we are to consider to-night is somewhat foreign to the subjects usually presented to this Association, but we make no apology to you on that account, for we venture to think its importance should be sufficient justification in asking for your attention for a few moments whilst we briefly examine some of its difficulties, and to solicit your active co-operation in trying to solve some of its problems; we are somewhat encouraged in this when we say that it is our firm conviction that no radical changes will be made in sanitation, either in practice or in theory, by the sanitary plumber or the so-called sanitary engineer.

Whilst making, however, no apology for the introduction of this subject, we do apologise for our own shortcomings and lack of literary skill; in the absence of which we fear we shall be unable to present our case clearly and with such precision as will enable the members of this Association to bring the mass and the weight of their great mechanical knowledge, experience, and skill in engineering, to assist in arriving at a sound judgment, which will reflect credit and lustre on this Association, and a substantial advantage to the citizens of this

"no mean" City, and the surrounding districts, which are, by common consent, classed as the headquarters of engineering, and the home of mechanical engineers.

The Sewage problem has engaged the attention and the best efforts of our civil and sanitary engineers for the last 30 or 40 years, and since the lamentable illness of the Prince of Wales, in the year 1871, public health has engaged the attention of both legislator and engineer, so much so that the improvements in public health since that memorable year have been marvellous, and especially, if measuring the progress of past ages by the good work which has been done within that period; a period which may be described as the era of modern sanitation and the alpha of sanitary science, the scope of which, being as varied in character as in its application to the wants and the conditions of the teeming population whose life and health it is intended to safeguard.

It is not our intention to inflict upon you a history of sewage, nor a treatise on public health or hygiene to-night, for writings on health are amongst the oldest in the world, the subject having engaged the attention of the profoundest thinkers and the most renowned leaders of men.

We have only to point to the elaborate directions in the Mosaic Law for the preservation of health, through scrupulous attention to cleanliness, and the isolation of the sick, and care in the use of wholesome articles of food and drink; for the value of these directions we have seen that throughout the whole of their history the Jews have enjoyed a remarkable immunity from epidemic diseases, and in most of the instances in which such diseases have occurred, it has been when they have departed from the law, or relaxed the wholesome vigilance enjoyed by it.

Sewage we shall define as the process of systematically collecting, removing, and disposing of refuse from our domestic

dwellings. That the wastes of life, and the organic refuse of civilization should be quickly and efficiently collected and disposed of, is an elementary duty of all civilized communities; the perfection, or otherwise, of its methods, reflects itself in the physical, moral, and social well being of such community, this is well understood by us all; were it not so, history would be false, science would be a sham, legislation would be futile and foolish, and the evidence of one's senses would be in vain.

Sewage, then, may be conveniently classified into four parts, viz.: 1st—dust, ashes, kitchen waste, garbage, and other solid matters generally. 2nd—excreta, urine and other alvine substances. 3rd—slop-water, discharges from sinks, lavatories, baths, and the waste water, &c., &c., of industrial and domestic purposes. 4th—surface water due to rainfall. The rapid and efficient collection and disposal of this heterogeneous mass is the problem awaiting solution.

Manchester, as also nearly all the cities and towns in this country, is built upon the banks of a river; advantage has been taken of this circumstance to get rid of the wastes of life and civilization by "dumping" the refuse into its flowing waters, irrespective of the injury it may cause to those living on a lower level of the river's course. This method obtains in the largest cities as well as the smallest hamlets. We have in our minds eye the picture of a scene witnessed by us in a small hamlet, above which are the sources of an important river, in a neighbouring County, the clear rippling waters of which are even now a favourite spot where Waltonians delight to take the lusty and lively trout, and where the artist is inspired by some of nature's loveliest handiwork, whereat we saw one member of a family fouling the stream at back of the house, whilst the good wife of the household was filling the kettle for the morning's meal at the front or down stream portion of their dwelling (the sanitary convenience being so arranged as to empty direct into the flowing

stream), and for miles this important river is both the domestic water supply and the outfall sewer, and when this river reaches, as it does, an important city some miles still further down its course to the sea, it is but little better than crude sewage.

We are painfully aware the rivers passing through this city are in a like condition, and are disposed to marvel how long this abominable system is to prevail: it should be condemned by all intelligent men, and should be absolutely forbidden by law, but as we are aware, from past experience, that law is seldom in advance of public opinion, we shall have to await some great public calamity before the two great political parties are convinced that public health and improvements in the environments of the people at large would be a more profitable watchword and battle-cry than a mere quibbling about the exact position and importance of a scientific frontier, or the relative value and importance of "spheres of influence," or the "open door."

The solution of the Sewage problem will be then both political, scientific and mechanical, and it is to the first of this trio we must turn, we venture to think, to obtain a fair starting point in the course we desire to see taken.

We submit the first and most important step should be to nationalise the sewage disposal, if we may call it so, or to create a National Sewage Board, having powers to plan out and to deal with the sewage of the whole country in one, or a number of great comprehensible, economical and workable schemes, where advantage could be taken of all the physical, geographical and industrial conditions of the various districts within a given area, not only to collect but to dispose of in the most advantageous manner, the sewage and the waste of the community, without injury and without risk to any existing interests.

Let us pause for a moment whilst we see how the sewage question is managed on the existing lines. Parliament in its wisdom, or its want of wisdom, has made certain laws, the objects of which are the promotion of public health, but the executive powers are placed in the hands of small local authorities; Manchester being one of the most important of such authorities. We will see how it works out.

This great municipality is much in the position of a lad having outgrown his clothes, and having no cloth available to replace the inadequate garments; it is a great residential and industrial hive, without provision for its ever expanding population, and like the lad before referred to, constantly wanting larger "clothes," until it has finally reached its municipal limits, and within its own limits it is found impossible to deal effectively with its own sewage without endangering the lives and the health of its whole community. Powers are, therefore, asked from Parliament to enable this sewage to be taken to a place arbitrarily selected, but belonging to another authority armed with powers and privileges similar to its own, and will, therefore, naturally resist the action of an outsider bringing objectionable matter within their district to their prejudice and perhaps injury.

It seems marvellous that a practical people such as we pride ourselves to be should so long tolerate legislation which, in effect, prevents a community from doing that which the law commands it to do.

How is it possible, for instance, that Manchester could collect and dispose of its own sewage and wastes of life of nearly a million people within her own boundary without danger and without injury to the lives of the whole community? It is found impossible, and to go beyond her boundaries opposition from adjoining authorities has to be overcome by purchase or fought out in the law courts at great cost, which costs come

out of the local treasury, whereas any benefits arising from improvements in the health of the people is national in importance, and should be so regarded.

We remember that a great scheme for dealing with the sewage was laid before the citizens of Manchester a year or more ago, who by an overwhelming majority rejected the great culvert scheme, which was to take the effluent (the least objectional portion of their sewage) right away into the tidal portions of the river Mersey, and so get rid of it for ever; it was the fear of the expensive opposition which was certain would be forthcoming from other authorities, and other interests, which, largely, was the cause of the defeat of that scheme.

We believe both Manchester and Salford this moment stand convicted by another authority for allowing sewage, which is capable of any further decomposition, to flow into the river or Ship Canal, an injunction has been obtained to restrain Manchester and Salford from doing that which they and others have done from time immemorial; the Courts have allowed a period of grace, during which time some other method must be found to get rid of putrescible matter, failing which severe penalties will be enforced. The City and the Borough authorities are now like "Mr. Micawber," waiting for something to turn up. It is scarcely to be supposed that the expiring years of the enlightened 19th century, science will be found so impotent, engineering so helpless, and chemistry so played out, that no plan can be devised to help them out of their very embarrassing difficulty.

We think all will agree that it was a piece of wise statesmanship which imposed upon the State the duty of collecting and distributing our letters, newspapers and parcels, and also to provide intercommunication with each other from Lands End to John o' Groats. National postage has been of inestimable benefit; can anyone believe that a national system of sewage

would be less so? The first movement in the final solution of the Sewage Problem then is political, and it should be our duty to press this fact upon our political representatives.

The second step towards solution will be scientific, and it should commence by dividing the country into drainage areas, having the physical conformation of the land more in view than mere local interests, and should be so designed and devised that every habitable house in every town, city, or congested district in the kingdom, will be cleared of its sewage or other putrescible refuse at every hour of the day, and wherever practicable the very moment that it is made. A stagnant putrescible heap should never be allowed to accumulate near to inhabited dwellings, for bad sanitation always demoralizes its environments; it pollutes the air as well as the water, both of which are the most important elements of life. Pollution of the air is one of the chief causes of a lowered state of health, which leads, not infrequently, to drunkenness, poverty, laziness, and even crime itself, for it may be generally accepted that incapacity for work and a disinclination to work acts under similar forces, so that when one is present so may be the other also; it follows, therefore, that the able and industrial classes of this country feed and clothe an army of incapacitated individuals who gravitate into paupers, tramps, loafers and criminals, who neither "toil nor spin" to supply their fair share of benefits towards the commonweal, but at the same time employ the best energies of our civil governing bodies in protecting the moral community from influences inimicable to the general well-being of the people at large.

The importance of a thoroughly scientific division of the country into drainage areas cannot, nor should not, be overlooked, and we venture to think advantage might be taken of our admirable system of railways and public highways, by which combination, routes may be obtained from city, town and

hamlet, fairly levelled and surveyed, that but little further engineering would be required beyond laying down suitable pipes for the conveyance and distribution of sewage along such routes, and the great network of their branches, with which this country is so well and so amply provided; and if the railways were also nationalised it would be an additional advantage to the whole community.

Distribution of sewage could be spread over a wider and more suitable area than is now either practicable or possible; and matter taken from the soil to the soil could be again more frequently returned, and being enriched by such abundance of fertilizing material, it would enable the English agriculturists to compete with success with the foreigner in our home markets, with profit to themselves and advantage to the whole nation.

Agricultural depression might be banished, and a contribution to the poor aristocratic landowner by the manufacturer would be unnecessary, indefensible, and uncalled for.

The best and the most modern main and tributary sewers might fairly remain, substantially as they are now made, but nothing should be allowed to enter therein except that which falls from the heavens, or if from certain classes of domestic and manufacturers' residuum, it should be made equal in purity to that which falls from heaven *when it reaches the sewers.* Any infringement of this regulation should be punished by the law, in fine or imprisonment. We then should soon see our rivers and streams restored to their ancient pristine purity, and even the Ship Canal a favourite resort for those on fishing bent, and its waters a rival to the upper reaches of the Thames, where house-boats, gaily bedecked, and their crews happy and healthy, intent upon obtaining enjoyment from their novel and salubrious surroundings.

The third step towards the solution of the sewage problem will be a mechanical one, and we know of no body of men more fitted for and more able to grapple with this difficulty than the members of this Association, who are assembled here to-night. We do not expect to find perfect mechanical appliances at once, nor by the skill or ingenuity of one man made perfect, but by many minds working upon the same object, as we have already seen in the case of the steam engine, and other highly effective machinery.

Before we consider the mechanical appliances for the collection and distribution of our sewage, it will be useful to note that in Manchester and Salford we have six main arterial railways radiating from their centres; these may be deemed the starting points of our scheme, along each of which should be laid a main outfall, iron sewage pipe, of but comparatively small dimensions, the diameter of which will be governed by the size of the district and the number of inhabitants it has to serve, and as it will be shortly seen nothing can enter these pipes other than from the water-closets, sinks, urinals, and other similar receptacles for liquid, animal, and domestic wastes; the combined superficial sectional area of these pipes need not exceed those supplying the domestic water supply of this city and borough, whilst the tributary pipes, like those supplying the water, will be of course correspondingly reduced area. The economy of this must be obvious, the city and borough could be suitably mapped out into convenient drainage areas, or sub-districts, each of which having it own main pipe, and into which every dwelling within such district would be connected, and eventually connected to the principal arterial main pipe, which will then take the course and direction of the various arterial railways into which all the pipes from all the various districts ultimately join, in short, substantially as do the water supply pipes, the difference being the flow being from the house, instead of to, as in the latter instance.

The flow of liquid sewage, like the flow of domestic water, should be under considerable pressure, and therefore flowing with considerable velocity towards the open country, where, at suitable positions on its route, but at a sufficient distance from inhabited dwellings, hydrants or sluices should be attached, and the sewage used upon the land, when, where and how, the farmers' experience has taught him is the most beneficial to the soil, and most advantageous to the crops he has to cultivate.

We have said the sewage pipes containing liquid should be under pressure, the pressure, however, need be inconsiderable when compared to the water supply; this fact becomes obvious when we remember that—unlike the domestic water supply, which is also used for industrial and fire extinguishing purposes—its only purpose is to transfer itself, or be transferred from each dwelling-house to the land, advantage should be taken of the physical formation of the districts through which it passes to aid its distribution and increase its power of propulsion. We have but to remind you that the height of Mottram viaduct, for example, might be utilised for a very considerable distribution of sewage, as well as an efficient and economical motive power for still wider area of distribution; along that valley of course scores of similar incidents will suggest themselves to such a practical body as the Manchester Association of Engineers.

Before leaving the question of the means of carriage and distribution of sewage, we should like to say that an installation of fresh air in compression should be deemed a public necessity, and that no residence, however humble, should be considered complete without it, the beneficial uses of which would be to keep the atmosphere in sick and other rooms in motion, as well as warming and ventilating the whole house; and lastly, an auxiliary force always at command to accelerate the flow of sewage, preventing obstruction, and areating the sewage, making

it practically innocuous at the point of its distribution on the land.

Now, so far as we have gone, we have briefly considered three installation systems, the domestic water supply, liquid sewage, and atmospheric air, in each of which we have a force and a power at hand ready for any mechanical engineer of sufficient ingenuity to convert into effective work.

We venture to think advantage might be taken of this effective power in making sanitary appliances, and their connections to the main sewers less dangerous to the community than is now possible or practicable, the power of a giant could be used with the force of a giant, and not, as at present, reduced to the feeble power of a pigmy. We now find in all water flushing sanitary appliances, and especially in the case of a W.C., the large porcelain basin with its large foulable surface area, which of necessity requires a correspondingly large quantity of water to flush away its contents, generally about three gallons, retained in a cistern placed a few feet above the seat of such W.C.; this apparatus might with advantage, be changed into a more effective mechanical appliance, arranged in such a manner that a deposit should soil the least possible surface of its receiver, and that the full and effective force of the water installation should be utilised to carry it right away into an hermetically sealed receptacle, and from thence injected into the main or tributary sewage pipes, before described. One quart of water properly applied, would be found more efficient than three or more gallons now so lavishly wasted in the present unmechanical method of its use. Similarly, wastes from sinks, urinals, and the like, should be efficiently and effectively dealt with in like manner.

Wastes from both baths and lavatories might be allowed to flow into the surface outfall sewers, but seeing all surface drainage in congested districts contains considerable organic

matter it should never be allowed to flow into either river or canal, until it is first made free from putrescible matter.

At the recent Sanitary Congress, held at Birmingham, Mr. T. de Courcy Mead, the Manchester City Surveyor, is reported to have said: "That the average daily flow of sewage into the Manchester system in 1897 was nearly twenty and a half million gallons, and that the flow per head of population was thirty-nine gallons per day in May to fifty gallons per day in December last. The quantity of water supplied was twenty-eight gallons per head per day, seventeen gallons of this would be for domestic use, and the remainder for trading and public purposes. The difference between the total quantity of sewage reaching the works and the water supplied was largely due to the admission of underground water, which passed into the old sewers and drained through defective joints."

Now all the above sewage, varying as we have seen from thirty-nine to fifty gallons per head per day, has to be collected and conveyed to the outfall works, and there either purified or sent into the Ship Canal, in a more or less crude state. Now in the plan I have indicated to you there would be the water due to rainfall, trading and public purposes, as also water from baths and lavatories only to be dealt with, prior to passing it into the canal or other flowing streams.

The solid and liquid sewage, as we have already shown, should be a separate installation, and the total quantity, when combined with water for flushing and cleansing purposes, would be but about five gallons per head per day. It will thus be seen the size of the pipes, and the power required for its conveyance, and the economy in cost of maintenance and its manipulation, bear no comparison to the present inefficient and inadequate system.

Ashpit refuse, so-called, in considerable quantities has to be dealt with in all large towns and cities, but especially so in

districts where fuel is cheap and abundant, as in this city for example, containing, as it does, nearly every kind of animal, mineral and vegetable matter, which in the aggregate, amounts to about 250 tons to every thousand inhabitants per annum.

How best to collect, convey, utilize, and finally dispose of the residuum of this unpleasant material is a problem ready and waiting for any clever and enterprising mechanical engineer to immortalise his name and fame, and at the same time make a fortune, for it cannot be supposed that an intelligent population will continue to tolerate the present system of conserving this sewage until fermentation has made it positively dangerous to health, and then diffusing its germs to the winds of heaven, in the present manner of its collection and conveyance, through crowded thoroughfares, spreading infection in all directions.

We have said all the wastes of civilization should be dealt with at every hour of the day; accumulation, and with it stagnation, should not be permitted, germination could not then take place, and the matter could be safely dealt with, without nuisance and without injury, in districts suitably selected, where it might be converted into effective power practically sufficient to be made self-collected and self-conveyed to suitable depots erected for that purpose.

It does not appear to us to be beyond the range of practical mechanics to provide an effective installation which would convert this flamable mineral, vegetable and animal matter into a power which would go a long way toward being sufficient for the provision of the compressed air installation we have previously referred to, or for other mechanical purposes, where from a centre, arterial mainpipes with their corresponding branches, connected to suitable receiving stations, the refuse could be (by the power of propulsion and exhaustion) "pulled" and "pushed" to its destination, without disturbance and without any personal manipulation of any human being. Manchester,

Salford and contiguous districts, containing as they do a million or so of a population, have about 250,000 tons of refuse to collect and dispose of per annum, which is somewhat less than 30 tons per hour, an insignificant quantity compared with 500 tons per hour said to be lifted and distributed at the grain elevator at Trafford Wharf, Ship Canal.

We have indicated the direction which, in our opinion, the solution of the sewage problem may be found, although we fear in a very imperfect and inadequate way; our desire is to find some way by which the lives of human beings may be prolonged and the death rate materially reduced, and this we venture to think can be attained in the direction we have indicated. Perfection in the conception of a scheme we do not suggest, for perfection exists only in the Almighty, but we can each leave our mark upon the sands of time, and no mark can be more worthy or more holy than making the lives of our fellow men happier, because healthier, and their environments cleaner, and their intellectual powers more refined by reason of clean and cheerful surroundings which the solution of the sewage problem will certainly bring about.

DISCUSSION.

Mr. Ford said the paper was very interesting and he did not speak despairingly, because of the extent to which the author had used his imagination in formulating his scheme. The paper was noteworthy with respect to the number of ideas that the author had gathered together, the breadth of view displayed, and the skill exhibited in outlining a national system of sewage disposal. Mr. Ingram was to be complimented on the skilful and delicate manner in which he had handled the subject.

Mr. C. H. Berry said that with regard to disposing of the sewage by pressure through pipes, this might be done by putting sufficient pressure on the pipes from a town's centre, by which they could all be cleared to some outlet outside. The pipes could also by this means be disinfected, either by a current of air, water or other suitable fluid, as often as considered necessary.

Mr. Joseph Nasmith said we were no doubt wasting, year by year, and day by day, an enormous manurial force, which would render us independent of all foreign sources of manurial supply, if we only knew how to apply it. One of the chief difficulties that beset engineers who tackled this problem was not so much that of finding an outlet for the stuff upon the land as of how to get rid of it as quickly as possible. In his judgment the plan of arranging the whole of a drainage area to drain to one point was impracticable, and to a large extent wasteful, whilst he was perfectly certain the cost of it would deter any public authority from taking it in hand. That it would be advisable to have a Central Drainage Board to replace the Local Government Board, who were very much fossilised in their ideas on this and other questions, he might be disposed to admit. The one cry of the Local Board was "land filtration." It must be remembered that land filtration was not the only thing to study in connection with sewage. It was becoming not so much a question for the sanitary or mechanical engineer, as for the biologist and the bacteriologist. It had been proved beyond a doubt that if they allowed ordinary fæcal matter, including even solids, such as leaves of vegetables, onion skins, paper, and other etceteras which went to make up sewage, to run into and remain in a sealed tank for a certain period it would become absolutely liquid. Two classes of microbes affected the sewage problem. These were the aerobic microbes, which demanded oxygen for

their existence, and anœrobic microbes, which could dispense with oxygen. The anœrobic microbes turned the solids in the sewage into liquid, and it could then be passed forward and by precipitation, discharge a large proportion of the solids. The remaining effluent could be passed through a filter and be rendered as pure as it was possible to make it. It had been discovered that if they passed a certain portion of this liquid sewage into a filter, allowed it to stand for a certain time until the anœrobic microbes had performed their work upon it, and then emptied the tank from the bottom and allow the air to pass into it, the second class of microbes would immediately set to work and purify and oxidise everything in the tank, so that they would obtain at the end a perfectly pure effluent. They could ascertain whether the tanks were performing their duty by analysing the effluent and ascertaining the amount of nitric acid in it. He thought it was in the above direction that they were going to obtain a solution of the sewage disposal question; he did not say that it would solve the problem as to how we were going to get back to the land the manurial forces contained in sewage. In the case of ordinary household sewage the microbes were given full play, but in the case of manufacturing sewage, there were frequently elements which hindered the action of these microbes. This difficulty could only be met by insisting upon manufacturers carrying out at their own works, at any rate, a partial system of precipitation, which would take out of their own sewage most of the solid matter, passing only the effluent into the public sewers.

At any rate they must protest against the dictum of the Local Government Board, that the sewage could only be dealt with through land filtration. This system was attended by the difficulty of finding suitable land, of preventing the beds being choked up, and when they were choked up, of clearing them for further use. If artificial filters were made, it was possible,

by simply aerating them, to purify and clear them, and make them much more effective than they had been up to the time at which they became choked.

Mr. Ingram suggested that railway cuttings and embankments might be utilised for his scheme. Such a suggestion, in his opinion, would only be partially practicable, because in many cases the gradient at which the sewers had to be laid down would not correspond with the railway gradients, and then again, the railway companies would, no doubt, raise objections to the utilisation of their cuttings in this way.

Where they got the sewage diluted by a sufficient quantity of water the sewage problem was solved, but this was only possible in seaside places or small country villages with an adjacent river of considerable size or the possibility of a discharge into the sea; Eastbourne being a case in point. This was, however, impossible in Manchester, and their only course was to adopt some treatment such as he had suggested. There were many objections to the plan of cleaning the pipes by compressed air. If there were any leak in the pipes the pressure would force the sewer gas out. In Amsterdam there was a system of pneumatic suction which drew the sewage along the pipes into tanks at various parts of the town. If there were any leak in the pipe, instead of letting sewer gas out, air was admitted and any mischief due to badly jointed pipes was obviated.

In public schools in America ventilation by propulsion was adopted, warm air being forced into the rooms several times in the course of an hour. The closets there were constructed simply of seats opening over a pit, at the bottom of which was a raised brick grating, on to which all the fæcal matter fell, allowing plenty of drainage. This was coupled to the exhaust shaft, and the result was that the warm air, which was filling the school, was permitted to flow down the seats over the fæcal

matter and up the chimney, escaping into the air at the top. All the fæcal matter and urine was thus dried, and was disposed of during the school recess in a very simple manner.

Mr. CARTWRIGHT, of Bury, said the sewage problem was a difficult one. The method suggested by the author of the paper was novel, but at the present time he feared it was impracticable varying, with the quantity of sub-soil, water gaining access to the sewers, the admission of manufacturers' refuse, the distance travelled in the sewers, and many other matters rendered sewage both variable and complex. The Local Government Board had a regulation that any scheme securing their sanction a quantity of land must be attached; still sewage could not be purified by simply pouring it on to the land in its crude state, it must undergo previous treatment, even if it be sent to the land at a later stage.

In precipitation schemes lime had in the past been largely employed, but it was found that its use in large doses, although producing a bright effluent, set up secondary decomposition when it reached the river. Iron had long been known to have a purifying effect on water, and in many cases it was now largely used in the form of sulphate. By its adoption at the London outfalls the cost of treating the sewage has been reduced from £82,000 per annum to £31,000 per annum.

He had advised the Corporation of Bury to adopt a scheme of precipitation, to be followed by artificial filtration, and the works were approaching completion. By the process the sludge was deposited in tanks and afterwards dealt with by pressing and burning.

In Lancashire the waste waters from chemical works, dye works, paper works, bleach works, etc., which found their way into the sewers, were not rich in nitrogenous matters but in carbonaceous matters, both in solution and suspension, and

these substances were not so easily decomposed, and their presence in a mixed sewage was therefore objectionable.

At Bradford the Corporation and the manufacturers had come to the conclusion that the domestic and trade refuse should be treated separately.

Notwithstanding the drawbacks and imperfections of the present day arrangements in dealing with the vexed question, he was afraid that the appointment of Joint Boards, as suggested by the author, over certain areas would not materially improve the situation.

The nationalization that would be productive of the greatest good would be that the Local Government Board should, instead of prosecuting Sanitary Authorities, who are at their wits's end how to effect a solution of the question, go on the line of the Massachusetts Board of Health, who use the taxes by employing experts to advise all Sanitary Authorities, who apply to them for assistance, as to the best methods to be adopted in dealing with the sewage of their respective districts.

The President then read a written communication he had received from Mr. James Saxon, which ran as follows:—

Whilst I cannot agree that the nationalization of the sewage is at the present moment a matter even within the range of practical politics, any more than the nationalization of land, yet I can see that certain advantages would accrue to the country if it were nationalized, as it would in the case of most things of a general character affecting the whole of the community.

It appears to me that the country has already taken one of the steps advocated by the author, viz., the division of the country into drainage areas. These drainage areas, which comprise the whole of a particular watershed, are governed by

a committee which has only power to enforce proper sewage treatment on the various authorities within their jurisdiction. These committees, such as the Mersey and Irwell and the Ribble Committees, ought, in my opinion, to have power to treat the sewage themselves, and apportion the cost in some way over the various authorities in that particular watershed. By adopting a general method of this kind, the sewage would be dealt with more effectually and cheaper than it possibly can be by the various authorities each employing a different method of treatment.

The suggestion in the paper as to a proper network system of iron pipes for the collection of the sewage from a certain district to a centre where it may be properly treated, is already solved by the Liernur system of pneumatic sewage removal, patented by the late Captain Liernur, and used at Amsterdam, Leyden, and other places with great success. Manchester had the opportunity in 1882, on the initiative of Councillor, now Alderman J. W. Southern, of adopting this system experimentally, but, although recommended by the Health Committee of that period, it was rejected in favour of the expensive water carriage system. It is not too much to say that if this system of sewage had then been adopted, a saving of some hundreds of thousands of pounds might have been effected, and that instead of the prospect of indefinite and constant expenditure which lies before us in dealing with Manchester sewage when collected, it might have been turned to beneficial and profitable use. A description of the Liernur system of sewage disposal may be interesting to members.

The Liernur system consists of a double set of conduits, one serving exclusively for house, rain, sub-soil, and sufficiently cleansed industrial water; the other exclusively for fæcal matter. Owing to the division of work thus effected, the cost of construction of double sewerage is less than the single sewer

of the water carriage plan. In order to distinguish the two parts of the system from each other we will call them "water sewers" and "fæcal sewers." Liernur's water sewers cannot pollute the soil with fæcal matter, as they do not receive such; and they are far cheaper of construction, not only on account of being much smaller in size, but also on account of not needing the expensive structures for entering, ventilating, and cleansing required by the water carriage plan. The fæcal sewers consist of cast iron socket pipes emptying into air-tight iron reservoirs which are placed below the pavement, centrally in a town district, the town being divided into such districts. The closets of the houses are connected with the system by means of branch-pipes of the same size and kind as the street pipes. The district reservoirs are operated upon by a so-called "pneumatic main," which passes by them all and leads to an engine house placed at some convenient distance out of town. In this engine house air-pump engines are erected for maintaining in the pneumatic main a vacuum of about three-fourths atmosphere over its entire length. When a connecting valve or cock is opened between the main and any district reservoir, the latter will suddenly be deprived of air, and thus obtain "suction power" for emptying the closets of all the houses connected with any street pipe discharging into that reservoir, it being only necessary to open one single cock for the purpose. The fæcal matter being thereupon collected in the reservoir is by means of the same main despatched without delay to the engine house, in order to be immediately converted into poudrette. The gases pumped out of the pipes are burned in the furnaces of the engine house and rendered inoffensive.

Water closets, like those used on the water-carriage plan, can be applied. The dilution due to these not only does not prevent the substance being converted into a dry powder, but Captain Liernur has succeeded in doing this so cheaply that its market

value is sufficient to cover the cost of working the system, and to pay interest on the capital cost of construction.

In 1894 the system was applied to 3,678 houses, and a population of 62,572. The sulphate of ammonia produced amounted to 601 tons, and its sale left a profit of about 98,000 francs. The cost of working was reduced to one franc twenty-eight centimes per head, say 12½d. In consequence of this remarkable result, the Municipal Council of Amsterdam decided upon a great extension of the system, and to this end voted a sum of 148,000 florins, to extend the system to 1,102 additional houses, and a further population of 21,539.

The great advantage of Captain Liernur's plan consists in this: that towns can get rid of their refuse with less building capital, and without the trouble and expense of irrigation fields, whilst the material produced can be stored by farmers until the time arrives for using it profitably in the customary process of agriculture.

With respect to the Manchester Sewage Purification Problem I have no doubt, now that the Culvert scheme is disposed of, that the "bacteriological" treatment of the sewage will be adopted with success, so far as purification is concerned, though the expense may be considerable.

Mr. Jos. Butterworth referred to the "pail" system introduced by Alderman Taylor, in Rochdale, twenty years ago, by which as much as possible of the solid matter was got out and burnt. There were objections to this method, but he thought there were ways in which mechanical engineers could overcome the difficulties, and it at any rate indicated the direction in which, in his opinion, a start should be made in dealing with sewage. Difficulty was caused owing to the tremendous amount of water with which they had to deal.

Mr. Thos. Daniels said he thought the best plan would be to burn the solids, use the ashes for manure, and take the liquids to the sea by means of a culvert. This might involve a big immediate expenditure, but it would save a continuous series of expenses in the future.

He understood that when the Ship Canal was started Sir Leader Williams wanted the Manchester Corporation to put down a culvert by the side of the canal. That was what should have been done.

Mr. W .Johnson said the author's scheme was somewhat Utopian; if realised it would be a great salvation to the nation, but the expense was practically prohibitive. He would like to know how many systems of pipes the author contemplated using. This was not clearly stated. He gathered that the number would be three. He imagined that there would be some trouble in households if they had pipes equal only to the water supply pipes. He thought the suction system mentioned by Mr. Nasmith was a very good one, and would constitute a great advance on the present methods.

It would undoubtedly be a good idea to return the sewage on to the land, but they would first have to prepare the land for its reception by laying a complete system of drains at considerable expense, and then to educate the farmers to the using of it. When they got the sewage on to the land, it was not suitable for all kinds of crops. In the case of some sewerage farms it was impossible to grow anything but rye grass, turnips of an inferior sort and mangolds.

He believed Chicago was spending about £5,800,000 in constructing a sewerage canal, 160 feet wide at the bottom, 22 feet deep, and 28 miles long. They were regulated by law, and had to send through this canal from Lake Michigan, 20,000 cubic feet per minute for every 100,000 inhabitants, and this canal

was not only intended to serve Chicago but seven or eight other towns in its progress towards a tributary river of the Mississippi which carried it onward into the sea.

The only apparent method of solving the problem was by carrying it away. If they adopted precipitation and made the residue into cakes by means of sludge presses, the farmer would not have them for love or money. The only way seemed to be to have a culvert or canal, or some means of "dumping" the matter into steamers which would carry it to the ocean. Mr. Daniels was correct in his reference to the proposed culvert by the side of the canal.

Mr. Staniforth said the first thing was to make the question a political one. The Government should take the matter up make it a national question, and, after perfectly thrashing it out, decide upon what was to be the proper method of disposing of the sewage, and then tell all the Local Boards and authorities that that was the way in which they must proceed with the matter.

He was in favour of a culvert scheme, if it could be made more perfect than the one brought before the Manchester rate-payers. If Manchester made a culvert, and other towns followed her example, they would have twelve or twenty culverts in the same watershed. That would not be a satisfactory state of affairs. If, however, they could make one culvert, and induce all the towns in the watershed to join them, the question would be much simplified and the expense reduced.

Mr. Councillor Simpson asked the author to withdraw his reference to the "Micawber-like" attitude of the Manchester Corporation. As a matter of fact a very large amount of time, skill, and money had been devoted to the question. Some gentlemen seemed to think that it would be easy to destroy by heat certain portions of the sewage and convey the

remainder to the sea. He fancied there would be objections raised in any neighbourhood in which the necessary destructors might be placed, and also at the sea-side places at which the matter was dumped into the sea.

He fancied that the remedy was possibly more in the direction suggested by Mr. Nasmith.

Mr. CUNLIFFE, of Radcliffe, said the Local Board there had treated them more liberally than at other places. They had a population of about 26,000, and had a very successful system, carried out by the Corporation's own engineer, of settling tanks and artificial filters. A portion of land had been reserved which they would have to use if this was insisted on. They were at the present time duplicating the tanks, because a further district had been added to the area covered. They had, however, some difficulty with the sewage from dye works.

Mr. INGRAM said he was sorry he could not withdraw his reference to the "Micawber-like" attitude of the Manchester Corporation, although he was ready to admit that the Manchester Corporation had expended much money, time and skill in dealing with its sewage, yet it was notorious that in this particular field of municipal enterprise Manchester had been content to follow rather than lead; he referred more particularly to the so-called "Dolly Varden" system and refuse destructors, in both of which the better types had not been selected. As to destructors he could understand objection being raised to those of the type put up in Holt Town and Water Street, but Mr. Simpson must know that there were types of destructors in use at other places which caused no nuisance whatever.

Professor Crooks had dealt in a very interesting and forcible manner with the enormous waste of manurial substances that was going on in this country. He says that "in the United

Kingdom alone we are content to hurry down our drains and water-courses into the sea fixed nitrogen to the value of no less than £16,000,000 per annum." The greater portion of this would be saved to the nation if the system he (Mr. Ingram) advocated was carried into effect.

The septic system, which was only of yesterday's growth, had not so far proved a great success.

He had never suggested that there should be an enormous pressure in the pipes that would collect and distribute sewage. The pressure would be very inconsiderable, and that always in the pipes near to the houses and away from the arterial drains; any leakage that took place would be inside and not outside the pipes.

The Liernur system had never spread far beyond Amsterdam and Rotterdam, and the reason why it was used there was that ordinary gravitation was impossible, as the towns were below the sea level, and they had to employ force of some kind to get rid of their sewage.

He had not said that the whole system should be done by gravitation; what he said was that if the whole system was blocked out in drainage areas it could be distributed all over the country, and sewage farms could be arranged wherever the land was suitable. The area of selection would be so large and so diverse that farms could be arranged at places where drainage would be quite unnecessary.

Mr. Johnson was right in his estimate of the number of pipes, but was totally wrong in his estimate of the cost. The expense in carrying out a great national sewage system would be an enormous economy when compared to the large number of schemes all over the country in nearly all of which are but tentative and temporary, and *all* must be re-modelled ere they become within measurable distance of perfection.

He had wished, in writing his paper, to make a suggestion as to the direction in which the sewage problem could be solved. He was perfectly certain that the only solution was the national one. He felt rather complimented when some of the speakers remarked that he had appealed largely to his imagination rather than to common sense in dealing with his subject. Imagination had played a great part in the history of this country, and he ventured to say that if they could put some of these imaginings into concrete form the solution of the problem could be easily and cheaply effected. They should all subordinate self-interest to the interest of mankind; selfishness is the darkest side of ignorance, and individual prosperity of the highest order is possible only in the happiness and prosperity of mankind, which happiness is attainable only by clean and healthy surroundings, which the solution of the sewage problem will bring about.

THE USE OF STEEL IN BUILDINGS.

READ SATURDAY, 26TH NOVEMBER, 1898,

BY

MR. EDWARD WOOD,

(MANCHESTER.)

The beginning of the nineteenth century witnessed the first recorded instance of the successful application of iron to the purpose of building. Destructive fires and the enormous premiums which the Insurance Companies asked created a demand for durable structures, and in 1801 a fireproof mill was erected in Manchester, for Messrs. Phillips & Lee, with beams, columns, and roof principals, of cast iron. The engineers were Messrs. Boulton & Watt. We should now-a-days probably think the building as designed then was clumsy and out of proportion, with its forests of columns—9ft. apart centre to centre—which had to carry the whole of the seven stories. For twenty-five years this building seems to have been the standard for subsequent erections, and little variation took place until in 1824 an improved section of cast iron beam was introduced by Professor Hodgkinson. In spite of this improvement, however, several alarming disasters arising from defective castings or faulty designs, occurred up to about 1850, one in an Oldham factory in 1844 involving a loss of 20 lives.

The uncertain character of cast iron led to the adoption of wrought iron for beams and principals. Although more expensive, this material had the advantages of safety, strength, lightness, and better appearance; it also afforded extended space for the convenient arrangement and free working of the machinery in the different mills and workshops.

In 1855, at the Paris Exposition, some wrought iron beams were exhibited of French and Belgian manufacture, showing a degree of excellence hitherto unattained in this country. They were of the H section, and being rolled in one piece a considerable saving was thus made in the construction over what had previously been made up of plates and angles, and a greater uniformity was obtained. For many years the Belgians and the French seem to have been ahead of the English in the use of wrought iron for building, as for a time the English architect was slow to change from the old style, and viewed the new with prejudice. Another reason why so little was made in England of the manufacture of rolled iron beams was because the English rolling mills were very busy on orders for material of other sections, which the makers considered were more profitable.

About 30 years ago the English makers began seriously to compete with the Continental firms by making small sections of wrought iron and steel for use in the construction of buildings, and now they, with the makers in Belgium, Germany, France, and America, manufacture steel H bars up to 22in. and 24in. in depth, in lengths up to 60 feet.

Our Colonies, where building material and labour are very costly, began long ago to see the advantages of iron structures for factories, custom houses, corn mills, &c., &c., and these have been erected in large numbers all over the world. To-day an immense export business is being done to Japan, China, India, South America, and elsewhere.

Many persons think that in the use of steel for buildings we in England are a little behind our American cousins. In America, as we all know, the high buildings are and for some years have been, constructed almost entirely of steel, with the walls and floors filled in afterwards. We are in full sympathy with the method adopted across the water, and are glad that

English architects and engineers are now falling into line and the American system is being largely adopted. In an article contributed to the *Engineering Magazine*, Mr. Charles D. Childs informs us that the difference in the practice of steel construction between the American and the English system is accounted for to a large extent by the difference in the conditions. The architects in each country are bound by the respective building laws, and whereas what we consider fireproof buildings in England would not very likely be passed in America, at the same time it is almost sure that the authorities would not allow buildings to be erected in Manchester of 20 or 30 stories, or as they are called "sky scrapers."

The excessive height of the American buildings has necessitated the use of steel skeleton construction in order to economise weight, and consequently thickness of the walls in the lower story, which otherwise would occupy valuable space, to say nothing of the cost of the material and labour. The usual thickness of the walls in America is only from 13½in. to 18in. In England the thickness of the walls at the ground floor level is usually about 27in.; if, however, instead of being five or six stories, as the buildings are in England, they were built three or four times as high, the increase in the thickness would have to be enormous, and the steel skeleton framework would probably come into general use. The steel construction, therefore, has to adapt itself to the style of building prevailing in the different countries. The great difference, broadly speaking, is that whereas in American construction each storey is supported entirely by girders at the ground floor level of that storey, in the English system the weight of the building rests mainly on large Bessemer girders on the first floor level. The steelwork in an American building begins a few inches above the bottom of the excavation, and consists of layers of steel beams embedded in concrete to form the piers on which the

steel bases of columns rest; the bottom layer being so designed that the load is distributed to the ground on an allowable pressure of from two to three tons per square foot. Anchor rods are embedded in the concrete, and bolt the column bases to the flange of the uppermost layer of steel beams; by this means the height of the pier is considerably lessened, effecting a saving in excavation and concrete.

It is our intention to attempt to show why steel is the best material to be used in the constructional parts of warehouses, manufactories, engineering works, &c., and to illustrate how it may afterwards be covered over or clothed with masonry, marble, terra cotta brickwork or woodwork; thus preserving all the architectural features of a highly artistic building, while at the same time the building itself is strong, reliable, and of a permanent nature. We propose also to describe the most recent adaptation of steel as applied by some of the leading architects and engineers of the day, and to outline in a very brief way what we consider are some of the advantages to be derived by the use of steel in the buildings of a large manufacturing city, like Manchester, Glasgow, Leeds, or Liverpool. It is not proposed here to enter into or explain the many different systems of fireproofing in buildings, although steel enters very closely into almost every method. This subject is in itself of sufficient importance for a separate paper.

To return to the main subject of this paper, we affirm that steel is the best material to be used for the framework of buildings.

1. It takes up much less space than stonework, brickwork or timber. This in itself is of very great importance where land is valuable, viz.: in the centre of Manchester, where it is worth £9 per square foot, and if the same results can be obtained from the use of a steel pillar, say 12in.

square, as in a brick or stone column 4ft. square, then there is a clear advantage in favour of steel.

2. It enables the architect to make the windows much larger, and this is a great convenience in narrow streets where light is so much obstructed.

3. It is more reliable than cast iron or any other material, and is not subject to dry rot, or failure through knots, sap and flaws, such as are met with in timber.

4. It can be produced at a price which will compare favourably with any other material.

5. By the use of steel the whole constructional part of a building can be made and erected without waiting for any other trade, and much time can thereby be saved.

MATERIAL.

Assuming that it has been decided to use steel in the construction of any given building, the first thing to be considered is the quality of the material itself. This as you know, is of primary and vital importance. It is comparatively easy now-a-days to obtain a high-class structural quality in view of the fact that so much time, money and brain-work have been expended on gettting the finished article, such as plates, angles, tees, bars and joists, to such a state of perfection.

The old fashion of ordering material by the brand, such as "Best," "Best, Best," and "Best, Best, Best," is now exploded, and is superseded by the modern plan of ordering it to a certain test.

The best works in England and Scotland are always glad to show the whole process of manufacture and testing to the users, and as they roll the material to a standard and recognised test, then the Architect and Engineer have a firm and reliable basis on which to make their calculations as to

strains of compression and tension. The factor of safety in steel now accepted is as follows :

(*a*) Three is accepted as correct for steel subject to dead and non-variable loads.

(*b*) Four for steel subject to ordinary or slightly variable loads.

(*c*) Five for material subjected to shocks or heavy moving loads.

The steel used for constructional work is either Bessemer or Open Hearth steel. Some Engineers prefer and specify the latter, on the ground that although it is more expensive to make, still it is more reliable. The additional expense of the Open Hearth steel is in consequence of the time taken in manufacture, a cast of Bessemer steel being made in a period of 15 to 20 minutes, whereas a cast of Siemen's steel takes 10 to 12 hours. As a general guide, it has been ascertained through lengthened practice that steel in constructive work exposed to vibration, heating and cooling, or to variable strains, ought to be made of Open-Hearth steel, while Bessemer steel will answer very well for structures which have a steady distributed load, and are subjected to no great differences of temperature. The safest plan is to use a moderately mild steel with a tensile strength of 26 to 32 tons, which will elongate at least 20 per cent in 8 inches, and showing contraction of 40 per cent. at point of fracture. Any strip of such steel cut off the bar ought to stand bending cold round a curve whose radius is equal to 1½ times the thickness of the piece tested, and should weld easily.

The average analysis of this class of steel is as follows

Carbon	·15 to ·25
Manganese, from ...	·45 to ·60
Phosphorous, under ...	·08
Sulphur	·07
Silicon...	·05

USES FOR STEEL.

The chief uses to which steel can be applied in buildings to advantage are as follows:—

(*a*) For foundation grillages or cribwork in lieu of stone or brick piers.

(*b*) For columns and uprights in place of stone, brickwork, or cast iron.

(*c*) For beams to carry the floors in place of wooden, wrought, or cast iron beams.

(*d*) For supports or core to flooring, either as joists embedded in concrete, or fireproof blocks, or as plates in corrugated form, such as Hobson's, &c.

(*e*) For roof principals and framing.

(*f*) For partitions and doors in places where space is of importance.

(*g*) For staircases, fire escapes, &c.

COLUMNS AND STANDARDS.

It is now generally acknowledged that steel columns are very much to be preferred to brickwork, stonework, or even to cast iron columns, for the following reasons:

(*a*) They occupy less than a fourth the floor space of pillars in stone or brickwork.

(*b*) In a cast iron column there is always the possibility of the thickness of metal being uneven, owing to the shifting of the core. This cannot occur in a properly constructed steel column.

(*c*) Steel columns of suitable sections lend themselves more easily than anything else, and can more easily be adapted for supporting on each floor the cross girders and joists which carry the floor.

(*d*) They are able to resist flexure and are thus more suitable for long columns as it is well known that long columns do not fail from crushing, but from flexure.

(*e*) They are more capable of carrying an uneven load, *i.e.*, an unequally balanced one.

(*f*) They can withstand shocks or suddenly applied loads much better than cast iron.

(*g*) They are more suitable for stiffening the framework to a building, as they practically form one continuous member from foundation to roof when the joints are riveted together on the site.

(*h*) They are more quickly manufactured: this we venture to suggest is a point in these days of high pressure.

(*i*) From an economical stand-point there is a saving as although steel is more expensive than cast iron, still the saving in material used frequently more than compensates for the additional cost in labour.

Before illustrating any sections or designs of steel columns or girders, a word should be said of the great and vital importance of seeing that the foundations of the building are of a high class and satisfactory nature. This is a matter for the Architect himself to deal with. It is also necessary that the columns be firmly bedded on their base, the joints and connections well made, so that the line of thrust may coincide as near as possible with the line of axis, as columns irregularly fixed lose a considerable amount of their strength. Referring to Plate 1 :—

Fig. 1 represents the familiar section of rolled steel which is the most useful form of standard for carrying medium loads, such as in a one-storey building.

Sections of this form are most suitable where the depth of the flange is nearly the same as the web.

Figs. 2 and 3 are stronger in section, being stiffened by means of plates or channels riveted on as shown. These are suitable for two-storey buildings.

Figs. 4 and 6 represent sections of columns which have been frequently adopted with success for workshops of two or more

bays, and provide for carrying the overhead travelling crane girders, one on each of the two outer members, while the centre member is used for supporting the roof principals. They take up much less room than the old fashioned large cast iron standard, and attachments for shafting brackets can be very easily secured to them.

Fig. 5 is a similar section to No. 4, but strengthened by means of plates. This may be used for longer pillars or heavier loads.

Fig. 7 represents a section built up of Z bars and plates. This pattern has been used extensively in America in many of their high buildings.

Fig. 9 is an exceptionally strong pillar designed by the Architect for the new Midland Hotel in Manchester. This will have to carry very heavy and unequally balanced loads.

Fig. 10 is a useful and economical standard built of channels, joists and plates. It can be made in many sizes, from 10in. × 10in. to 18in. × 18in. This is the section suggested for use in the seven-storey building in our illustration. The plates and channels would be gradually stopped off as the upper storeys were reached, leaving the H bar alone to carry the roof.

BEAMS AND GIRDERS.

Steel girders possess most of the advantages over cast iron beams that we have already noted in favour of steel over cast iron columns. They also enable the architect to place the columns very much farther apart, additional floor space is thus secured, and there are not the obstructions usually found where cast iron is used. In comparing these with wood beams, it will be noticed that the depth necessary in a wooden beam seriously interferes with the head room in a building, and they can only be used in places where the span is small. It is very interesting to notice and compare the relative sections required

of wood and steel for a given span. Take for instance a steel joist 10in. × 6in. × 16ft., this at a span of 14ft. would bear a safe distributed load of 16 tons, whereas we should require a pitch pine beam of 20in. × 12in. to carry the same weight. A system in vogue some years ago was to bolt wooden beams to each side of an iron flitch plate, ⅜in., ½in. or ⅝in thick, by means of bolts about 18in. pitch. This plan is not only cumbersome but costly, and is now very seldom adopted.

The disadvantages of cast iron as a material for floor beams are now generally recognised, and because of its uncertain character its use in bridges has long ago been given up. Cast iron is not so well suited to stand shocks as steel, and there is always a possibility in cast iron of a weakness through blow holes and defects under the surface. In addition to this the unequal cooling of a casting increases the liability to unequal strains in the flanges or web Beams are now seldom made of wrought iron, as mild steel is a more trustworthy and elastic material, whose tensile and compressive strength is nearly uniform, and averages between 40 to 50% in excess of wrought iron.

Before describing the various forms of steel beams and girders it is essential to notice that the joints and connections between steel girders and columns and between cross joists and girders should be carefully worked out, and accurately made. The proper number of bolts and rivets should always be calculated for strength and bearing area, and the bearing surfaces should be carefully fitted together.

Referring to Plate No. 2:—

Fig. 1 represents an ordinary steel girder in every day use suitable for carrying a Manchester warehouse floor in general conditions. This is the most common form of main girder, and consists of a joist with plates riveted to the top and bottom flanges.

Fig. 2 illustrates a form of web-plated girder made up of angles, flats and plates. It has provision on the web for carrying the floor joists, thus effecting a saving in headroom.

Fig. 3 shows a web-plated girder, but for a larger span, with special bracketed seatings to receive the intermediate floor girders.

Fig. 4 shows an open web girder, a form which is frequently used to admit as much light as possible.

Figs. 5, 6 and 7 are forms suitable for carrying internal walls or for forming lintels over doorways or windows, etc.

Figs. 8 and 9 represent a box girder and triple web girder. These are generally used over larger spans where deep girders are inconvenient.

ROOFS.

Having dealt with the columns and girders, we now come to the roof of the building. The chief advantage to be secured in using a roof the principals of which are of steel, is the great lightness of the material used. The difference in the sizes of the members, especially the tension members, in a steel principal and a wood principal of similar span are very marked. The main tie beams of a timber truss, say 45ft. 0in. span, would be about 12in. × 6in., whereas in steel we can do the same thing with a flat bar about 4½in. × ⅝in., or with a round bar 1½in. diameter. Failure from shrinkage sometimes occurs in a wood roof, and is a very serious defect causing as it does an increase of load on certain members which they were not designed to carry. This objection also applies to a combined roof composed partly of iron and partly of wood, the rafters and struts being of wood, and the ties of iron or steel. Another disadvantage of wood and iron principals (like other composite structures) is that it is impossible to calculate exactly the stress on each member, owing to the varying elasticity of the different

materials when under load. Most of the buildings of the class shown in our illustration are finished with a ridged roof covered with slates and glass. It is often the custom, however, to have a flat roof with a covering of concrete and asphalte, and in this case the roof framework is formed like the floors below, but of lighter sections.

Plate No. 3 contains some examples of modern steel roofs. Figs. 1, 2, 3 and 4 represent common and useful designs for steel principals for spans varying from 20ft. 0in. to 60ft. 0in., and most of the buildings of the class mentioned in this paper come within this limit.

Fig. 5 shows a principal of more ornate design, although as a rule it is not the custom to put much ornament in the top floor of a warehouse. A design of this sort is very suitable, however, for a lecture room or a technical school.

Fig. 6 is an example of roof suitable for a large market or warehouse, where plenty of ventilation is required.

Figs. 7 and 8 are examples of Mansard roof. Here you will notice advantage has been taken of the space between the eaves and the roof to form another floor without interfering with the right of light laws, which are the bugbear of every Architect. In all the instances mentioned it is important that the steel purlins should be properly secured to the principal backs, and due provision must be made for wind bracing and cross ties.

We have now reached the top of our building, and the skeleton framing is finished forming a complete structure in itself. It is also necessary in very high buildings to introduce vertical diagonal bracing between the columns, and also in buildings of five or six stories, where there is an absence of cross walls. We will now turn our attention to some of the internal fittings such as floors, partitions, doors, and staircases.

FLOORING.

Want of time prevents anything more than a passing mention of the many different systems of flooring, a large number of which have been patented, and are frequently used in the construction of buildings such as we have before us this evening. For the purpose of this paper, however, it is perhaps enough to mention the ordinary and simple method of fixing small steel joists to the cross girders, which are then filled in with concrete. This method is illustrated in Figs. 1 and 2, Plate No. 2.

PARTITIONS AND DOORS.

Steel partitions connot be said to form part of the construction of a building, but in places where land is very expensive and for fireproof purposes, it is well worth the while of the Architect to consider the advisability of using angle framing and steel lathing in lieu of brick walls.

Steel doors are now so widely used that it is unnecessary to spend any time in discussing their advantages, but it is interesting to note that now-a-days the frames themselves are made of steel, formed of channels, angle bars, and plates. This gives a better and more reliable article, with a much higher finish, than the old-fashioned cast iron door frame.

STAIRCASES.

Steel staircases and stair treads are used in places where there is much traffic (in many cases with small pitch pine or oak blocks let in). These can be seen in most railway stations. The Factory Act of 1891 requires fire escapes for factories and buildings where there are more than 40 hands employed, and these can be manufactured almost entirely of steel.

A word or two may be said by the way in regard to the importance of efficient painting of the steelwork, as its durability depends in a large measure on this being regularly attended to,

Material hidden from view should be painted before being built in, and two or three coats should be applied to that which is exposed to weather, to be renewed according to circumstances in three to five years.

Thus it will be seen that having on a good foundation commenced our building with the columns, having fitted in the beams and floor girders, and having erected the roof, filled in the partitions and provided staircases and doors, we can now send for the bricklayer, mason, terra cotta manufacturer, joiner, slater, plumber, decorator, and thus we have a finished building, which we venture to say is suitable for the occupation of any who are anxious to have a structure which is strong, permanent and artistic.

DISCUSSION.

Mr. G. F. Freeman said that in the early part of the present century, when the so called "iron age" began to assert itself, many engineers were sceptical as to the utility of the metal for the purposes to which it was proposed to adapt it. When it was first proposed to build ships of iron, it was said by many that a ship so constructed would sink as soon as she was launched; that, however, did not happen. He dared say many of them were astonished, when they looked at the large ocean liners that left our ports, at the remarkable results obtained with ships built of steel.

There was no doubt that steel would assert itself more and more in its adaptation to building purposes. Its strength, lightness, durability and comparative cheapness would combine to force it into use in this country, as had already been the case in America. The so called "fire-proof" buildings in iron and steel were used were, however, really not fire

proof at all in the strict sense of the word. If a fire occurred in a mill or warehouse composed of bricks, stones and other materials, with beams and supports of hard timber, the interior would be burnt out but the wooden supports would still remain, keeping the shell of the building almost intact. Now, supposing the proprietor went to his architect with a view of obtaining plans for a new building, and the latter determined to put in iron and steel wherever possible, to insure it against fire. If a fire again occurred the interior would become like a burning fiery furnace, and the metal beams and supports would become heated to almost melting point. If these were allowed to cool down it might be all right, but this would not be allowed. The fire-engines would be requisitioned, and water thrown into the building, which, getting on to the metal beams, girders and pillars, would cause them to twist and crack, and finally to bring the whole building down in a mass of ruins. To avoid this, iron and steel used for building purposes should, wherever exposed to the action of the fire, be made fire-proof, and this could be done in several ways. The exposed parts could be wrapped in steel lathing and then covered over with fire-proof cement. In a room where the metal was thus fire-proofed, the fire would be confined to that room and prevented from extending to other parts of the building. In America this method was being almost universally adopted, in fact many of our English architects were also adopting it ; a number of the large buildings that were being put up at the present time in London, Glasgow, Liverpool and Manchester were fire-proofed in this manner. Iron and steel would become increasingly popular for building requirements if some plan of fire-proofing were adopted.

Mr. W. H. Hunter said there were two difficulties in the way of the practically universal adoption of steel construction for

large buildings in cities like Manchester. In the first place, they had had as yet, steel construction being of such comparatively recent adoption, little or no experience as to the maintenance of these steel buildings. Most of the buildings with which they had been concerned were those in which the iron or steel work was displayed; in other words, they could see the greater part of the steelwork, could observe what was taking place, and could, when occasion required, scrape and paint the surfaces. Experience had told them how urgent was the necessity for constant scraping and painting, and how great was the annual cost of such operations. These remarks did not apply to a building such as that shown on the picture exhibited by the author, in which the steelwork was hidden and concealed by the work of the masons, brick-layers, terra cotta makers and other trades. In such a building they would never be able to see how the steelwork was faring, or what was taking place in it. Such a building might, he thought, in time collapse without a fire.

The second difficulty was that of fire. Mr. Freeman spoke of fire-proof buildings. He (Mr. Hunter) wished he knew of one, or of any way by which a building could be rendered fire-proof. There was at present working in this country, a body known as the Fire Committee, composed of engineers and architects, and of employers of engineers and architects. He had served for some time on the Council of that Committee, which had carried out, and were still carrying out, many impartial tests. One result had been to make it very clear that Mr. Freeman's view with regard to steel construction was rather too optimistic. The Committee had tested steel columns with a load about equal to that which they would have to bear when standing in a wall, and had found that at about 1120° Fah. the column would buckle up, and finally suffer an entire collapse. The tests were made in regenerating furnaces, into which no water at all was allowed to enter, and the temperature was regular.

The two difficulties above mentioned stood in the way of steel construction in places like Manchester, which, apart from these considerations was entirely admirable. In the erection of such buildings in the United States they had introduced a happy combination. Personally, he would no more allow an architect to play with steel construction than he would allow his child to play with fire, and in the States they shared this view. They got a competent engineer, who was accustomed to the work, to design the structure, and then called in an architect to do the ornamental part, with the result that the building was scientifically constructed and aesthetically designed. This was as it should be.

Mr. Hans Renolds gave particulars of some of the most modern American Engineering buildings. One of these was the fifth building of the Brown & Sharp Manufacturing Company. It contained 50,000 sq. ft. floor space, and was the shape of a U, with three sides, 100ft., 163ft. and 83ft. This firm's previous buildings had been built with a load of 100lbs. per sq. ft., distributed all over the building equally. The last building was, however, made much stronger and the steel stanchions and floor beams were chosen of such dimensions as to carry safely, in addition to their own weights, a uniformly distributed load of 375lbs. per square foot for the second floor, and 225lbs. per square foot for the third and fourth floor. Another point which guided the firm in putting up such a building was the desire to have a fire-proof structure. For a Manchester cotton warehouse it was perhaps scarcely possible to make a fire-proof building, but for an engineering works such a building as Brown & Sharpe had erected might safely be called fire-proof.

A similar building with 44,000 square feet floor space had been erected by him, and just finished, in Brook street, Manchester, with absolutely no timber about; even the window

frames were made of iron. No wood patterns being stored, nor pattern shop carried on, no fire could find any fuel, and therefore no insurance was carried. Another feature of his building was that it had an asphalted flat roof, which served as a splendid open air yard, where such things as coke, scrap iron, packing cases, pickling tanks, water tanks, condensing tower, emery polishing cyclone, etc., were finding their places.

The brickwork used in Brown & Sharpe's building was merely to cover up the steel frame-work, and to form the flues for the Sturtevant heating and ventilating system. The quantity of brick required for this construction was only that of a 12in. solid wall, whilst its supporting power was that of a 36in. solid wall. The building was put up in a very short time. The first storey is 16ft. 10ins. high, the others are 13ft. 1in. between floor and ceiling. The flooring is of hollow brick tile arches with a spring of 4ft. Upon these rest a 5in. thick spruce floor, then a 2¾in. spruce planking tongued and grooved; and over this a diagonally laid course of matched spruce 1⅛in. thick.

Mr. Renold had several photos of this and other tall steel frame buildings. One was a photo of the biggest building in New York; it had 30 storeys, and was 475ft. high; another was 20 storeys high. These buildings were run up in an incredibly short space of time. In Detroit a building of 15 floors, covering an area of 100ft. by 175ft., built of terra cotta and costing £200,000, was completed in 18 months; another, 18 storeys high, 40ft. by 160ft., and built of white bricks, was commenced in October, and in the following June was completed and tenanted. A building of 12 floors, 100ft. by 80ft., built of brick and stone was completed in 18 months; another, built of stone, 14 floors high, 180ft. by 90ft., was built in 12 months, whilst the entire iron frame-work of a 10 storey business building in Broad Street, was erected from basement to roof in six weeks.

If such buildings as these were more generally adopted in England it meant a good deal of work for the engineer. We were, however, not educated up to it as yet. What a different town Manchester would be if it had blocks of 10 to 14 storey buildings in the business part of the city, with only half to one-third the number of streets; but what streets there were, to be two to three times their present width. Fancy Market, Mosley or Cross street, 100 or 120ft. wide! In this way not only a finer city, but a healthier place to live and work in, would be the result. Ever so many more people could be housed in well-lighted and comfortable offices than was at present possible. What endless work was there in view for our English girder rolling mills and our hydraulic or electric lift makers.

Mr. M. Ingram said that some years ago he had consulted Mr. Tozer, the eminent fire brigade captain, respecting the plans of a so called fire-proof building. Mr. Tozer told him he would undertake to bring that building down with a load of fire-wood. Further, he said that whenever a fire occurred in any of the so called fire-proof buildings in Manchester he kept his men away from it as much as possible, and let the fire do its worst rather than risk the lives of the men by ordering them to enter the building. In connection with some of the walls in the Town Hall, Mr. Tozer was consulted by the Committee, and acting on his advice the Committee took away the iron doors and replaced them by wooden ones, willow being the material used, and he contended that they would resist fire very much better than iron would do. Experience had told them that when a fire took place it was checked when it came in contact with a hard wood, such as oak.

If they had buildings of the height suggested by Mr. Wood they would have to widen the streets if they wished the light of heaven to enter therein.

THE NEW YORK
PUBLIC LIBRARY

ASTOR, LENOX AND
TILDEN FOUNDATIONS
R L

Mr. Henry Bates said he had had experience in putting up buildings with steel roofs, girders, &c., and so far as the strength of floors were concerned he never went beyond five cwt. per sq. ft.

In a steel roof, put up in 1882, covered with glass on the top, painting had only been necessary twice, and though it measured 140ft. by 30ft., he did not think it had cost 10/- in glass. If they had covered it partly with slate and partly with glass the expense would have been far greater. They had, within the twelvemonths, put another roof up 180ft. by 38ft., and had kept entirely on the same lines. It was important to keep the steel work in view as much as possible, because everyone knew that steel corroded much more than any other material.

Mr. J. H. Nodal said there were many instances in which steel was of admirable use, as for example in engineering works, where it was almost indispensable, especially for roofing, where cranes had to be carried in columns for erecting purposes, &c.

Taking the case of an erecting shop, and assuming that, as was now the case, they were doing away to a large extent with the necessity of always carrying shafting on second floors, it was desirable that they should have as much light as possible from the roof, and to secure this *desideratum* the steel roof was eminently adapted. There was possibly a difficulty in the case of foundries where jib cranes were carried from the roof, but he had in several cases placed light steel roofs over foundries and still carried the jib cranes by girders beneath the tie rods of the roof. These had answered admirably and allowed the light to pass, without the enormous beams that were usually necessary where wood was used. By a large use of steel they could get far more light in structures, such as engineers' shops, than by using any other material, and there was little fear of damage by fire.

THE NEW YORK
PUBLIC LIBRARY

ASTOR, LENOX AND
TILDEN FOUNDATIONS
R L

With regard to the probable condition of the steelwork in a building such as that shown, in fifteen, twenty, or thirty years time, he believed he had quite as much reason for thinking it would be perfect after the lapse of that period, considering the way it was covered, as any one else had for thinking it would not.

Mr. Renolds had mentioned a building in which the floors would bear 400lbs. per. sq. ft. That he thought was about the standard now adopted by Manchester architects. At any rate the floors at Marshall and Aston's would carry 300lbs. per sq. ft.

There were English firms that could compete with American firms in putting buildings up quickly.

He would not like to express any strong opinion respecting the merits of Siemens-Martin and Bessemer steel. They could get splendid Bessemer steel, and for most purposes it accomplished everything required.

Perhaps he had gone rather above the mark with regard to foundations, but it was best to be on the safe side, and he did not want to hear of any collapse in buildings he had helped to construct.

---

6 Plates follow illustrating this Paper.

HE USE OF STE

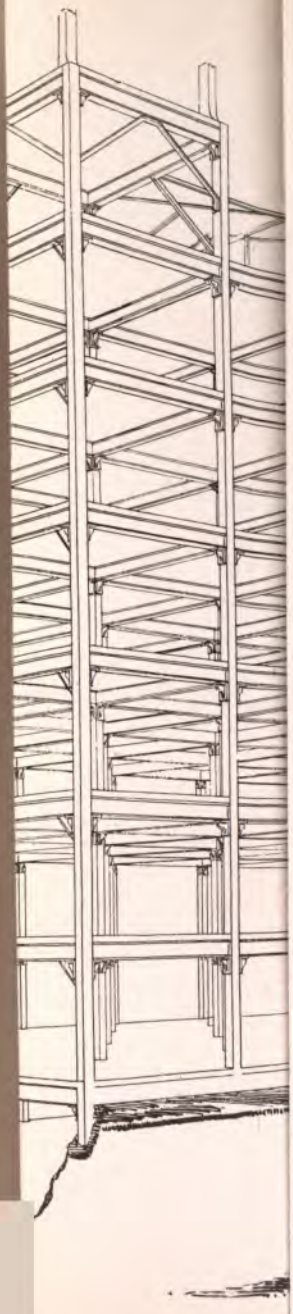

RK FOR A TYPICAL

THE NEW YORK
PUBLIC LIBRARY

ASTOR, LENOX AND
TILDEN FOUNDATIONS
R L

NEW YORK
PUBLIC LIBRARY

ASTOR, LENOX AND
TILDEN FOUNDATIONS
R L

TOPICAL QUESTIONS.

MEETING, SATURDAY, DECEMBER 10TH, 1898.

Question 1.

"*Tool Rooms, their advantages and disadvantages.*"

The PRESIDENT (Mr. Henry Webb) said his only experience in connection with tool rooms had been in America, and in one or two cases in England. In America, it was, speaking generally, the universal practice to have a portion of the establishment set off as a tool room, where all the tools were made and ground to gauges, and the men were not allowed to do anything on their own account. The tools required for the remainder of the week were given out at the beginning. There was no confusion such as existed here when stocktaking took place. They could tell you every tool they had; everything was accurately tabulated.

Mr. F. J. WICH said that in their place they had tool rooms, and found them of great advantage. They kept in them not only the tools, but also the blue prints. When a man got his job assigned to him, he obtained an order from the foreman, took the note to the tool stores, and there got both tools and blue prints. They worked as near as possible to the American system.

Mr. HANS RENOLD said he had that week seen in the papers a report that in England there had been this year a reduction of 2½ millions in the export of manufactured articles, and the United States had reached an export of nearly double their

import, the export being mostly made up of manufactured articles, not of raw material. He held that this tremendous expansion of American manufactures and exports was due solely to the American system of tool rooms in connection with engineering works. The American tool room was a result of the greater division of labour, higher organisation of engineering works, and larger specialisation of the manufactures passing through the hands of firms in the United States. They might ask, what was a tool room; that was a difficult thing to explain in a few words, as in each engineering works the tool room, its constitution, size, and importance, varied. At Brown & Sharp's, out of 1,600 or 1,800 hands, more than half were engaged in the tool rooms, and less than the other half in the manufacturing departments. As an instance they had one tool room in connection with their Wilcock & Gibb's sewing machine works. They had another tool room which he might call the tool store room, where the stores, such as waste, emery cloth, &c., and at the same time the tools were kept in good condition, grinding machines being provided for sharpening the tools, and apparatus for testing the rimers, grinding the drills and cutters, &c. There was another tool room where they made jigs, and all the drills, rimers, parallel packings, &c. Finally he might say that there was no hard and fast rule as to what a tool room was, what it did, and how it should be set out.

Mr. John Hall said they had had a separate tool room for more than 25 years. The question depended upon the class of work they were doing. If his firm had to have half of their men in the tool room, they would have to be "wound up" pretty quickly.

As to the exports of American tools, if the Americans would take off the duty of 40 or 50 per cent, English tool makers and machinists would show the Americans what they could do.

Mr. Henry Hodgson said the President had remarked that in the American tool rooms they gave out at the beginning of the week the tools, &c., for the whole of the week. How would the system act where a firm had never a job that lasted more than a day, or any continuous run of a particular class of work. They had often to put another job on the machine before it had finished the one then on.

As to the system at Brown & Sharp's, he should think that by having half their men in the tool rooms it would add 100% at once to the establishment charges, whilst there would be another 100% increase on account of other charges, which would in most establishments in this country cause a shutting up of the shops pretty soon.

He wanted to know what were the advantages of the tool room to general engineers, and not for repetition work. Tool-rooms were practically indispensable for repetition work, but how was the tool room to act at establishments where there was such an enormous variety of work as existed at most general engineering shops.

Mr. W. Lawson said that from conversation he had had with American makers he found that a good deal of their success was due to the excellent organisation which prevailed in their establishments. He could quite believe Mr. Renold's statement as to Brown & Sharp's having half their men in the tool rooms. In England, however, different conditions prevailed when they tried to construct a tool room on the American plan. They had old grooves to get out of, and his impression was that they had in this country in a great measure been acting on wrong lines.

Mr. W. Fox said he would like to know in what way they could give out tools, &c., for the whole of the week, where they

had fifty jobs in three or four days, and did not know when any of them would arrive, such work including hydraulic cranes, machines, locomotives, dredgers, electric light machinery, &c. He wanted to know whether there was any system in America whereby they could prepare for these things in advance, so that they could apply the system of tool rooms in such cases.

Mr. F. J. Wich said the only thing to do was to make a speciality of one thing; not to try to do everything but do one thing well.

The President said in America they did not go in for making everything. For instance, if a person asked an American firm for a 12in. lathe, he might receive the answer that they only made up to 6in., but had the best 6in. lathes in the world.

Question 2.

"Can the use of machine tools in English works be carried too far so as not to be economical?"

Mr. Henry Hodgson said the answer to the question depends upon circumstances, principally upon the kind of work done.

In the manufacture of locomotives and engineers' tools, in which, as a rule, all repairs are effected by the owner without calling in the services of the makers, the extensive and complete use of machine tools will be economical. In the manufacture of marine engines, the same might be said with a little reservation. Also in those works in which the machines or articles made are comparatively small, and where in the case of repairs, the machines can be returned to the makers as a complete machine, and the repairs effected inside the works, then in such a case the use of machinery cannot be carried too far. And the same may be said where the manufacture, although diverse in character, is all made to standard sizes, and

all the several parts sent into stores, thence to be given out, put together, and sent away whole or in parts. Typical examples of these latter are our textile machinery works—Messrs. Willans & Robinsons, Messrs. Crossley Bros., Messrs. Marshalls, of Gainsboro', and others. In all these cases he did not think it is possible to carry the use of machine tools beyond the economical limit.

On the other hand, in the case of what we may term, in place of a more definite one, general engineering works, where, whilst the manufacture of various articles on machines is considered to take a leading part, they are also called upon to repair their own and other makers' work, and which from various causes may have to be repaired *in situ*, necessitating the sending out of skilled men, the demand being irregular, and to meet which it is necessary to keep a staff beyond what is required for the regular needs of the work inside the shop; in such cases as these, work of some kind must be provided to keep what may be termed the surplus staff employed, and such work, at any rate under the present conditions of workshop organisation, can only be that, which under different conditions would be done by machinery. In such cases as this the use of machinery could, in his opinion, be carried beyond the economical. It may be said as a reply to this that work of any kind can be produced so much cheaper by machine than by hand that it will pay to lose production from the men who are called upon for this irregular work. His reply to this was that they cannot afford to have idle men about; every man must be kept fully employed if they are to have any good out of the others, and as it is necessary to have a staff ready for instant demand, a certain amount of work that could be done by machine must be left for these men to do by hand.

In conclusion, he could not but feel sorry, as one brought up in the old school of engineering, that the all-round man of 30,

40, or 50 years ago, had practically disappeared from our midst. One never sees the old paper cap millwright, who could tackle anything, now-a-days, he has been crushed out of existence by the use of machinery; which whilst it may be economically right, has left the engineering world the poorer by the loss of a man, who was a great power in his day and did much to prosper engineering in this country.

Mr. Samuel Dixon asked what must be substituted for machine tools; were we to go back to chipping, filing, chiseling, &c. The question of machining or hand work was one of cost, and they must consider together the cost of the man and the machine. It was often cheaper to pay £1,000 for a machine than to employ a man to do the work. A man might represent a machine of about £800; taking 10 %, it was £80 per year, and it was more economical to have a machine, if they paid £700 or £800 for it. In their shop he calculated that every mechanic with full wages represented a machine of £900. They had to take the man and the machine together if they wished to know what the cost was.

Mr. Joseph Nasmith said the question would have been better put if it had been made to read "Can the use of *special* machine tools be carried too far?" It was quite obvious that where they had a large number of things to produce from one pattern, day after day, week after week, a special tool became the cheaper thing in the end, especially where they could keep one job going on several machines, so that a man could mind more than one machine. Even, however, in repetition work there were cases where it did not pay to buy special machines for the purpose, as they could often use everyday tools with jigs, and obtain as economical results as if they had a special tool. He had himself been considering, in connection with a

case that he had to deal with, whether he should put down special tools for drilling, for work connected with prepayment meters, instead of jigs and single tools. He had come to the conclusion that in this case, by using the tools they had, they would be able to turn out the work as cheaply as with special tools. He might also mention two instances connected with the manufacture of spindles for ring-spinning frames. One firm had an elaborate set of tools, including special turret lathes, &c., and the other was using the ordinary lathes that were in use years ago, but was still making the spindles quite as cheaply as the first-mentioned firm.

It was quite obvious there were cases which had to be decided by themselves. No rough and ready rule could be laid down. There were cases in which the use of special machine tools was not an advantage, but on the contrary, an economical disadvantage, whilst there were cases where a large quantity of the same thing were being continuously turned out, in which the use of special machine tools was a positive advantage.

Mr. W. Lawson said the question seemed to be what must they do with the outworkers when they returned to the shop after their jobs were finished. They could not send them about their business and must find them something to do.

Mr. J. Butterworth said the last speaker had voiced his ideas. They had to find these men something to do when they were in the shop.

Mr. H. Hodgson said that where the whole of the work was done inside, and they had no men to send out, he quite believed that everything could be done cheaper by tools than by hand. That, however, did not apply where they had to send batches of men out during the week and these returned at

irregular intervals. They had to find these men something to do, and if all the work was done by machine what was to become of them?

Mr. ALFRED SAXON said his experience was that the more work they did by machine, the more fitters they employed. The foreman was amazed when they went in for tapping and studding machines; he thought the fitters would soon be thrown out of employment, but the more machine work of that sort they had done the greater was the number of fitters in their employ.

As for the spare men they had always need for these, and he did not know what they would do if they had not spare men in every department.

If the work could be produced more cheaply by machinery it ought to be so produced. His experience was distinctly in favour of extending the use of tools in engineering works, as compared with the position at the present time.

Mr. HANS RENOLDS said the first remedy for the state of things mentioned by Mr. Hodgson was that people should not have machinery mended when it went wrong, but should have new machinery put in its place. Another remedy was one which had been suggested to him by a speech made some time back by a leading London employer in the plumbing trade. In order to keep his men together when they had finished their special jobs he opened one or two special departments in which work was done whenever he had these spare men about. It seemed to him (the speaker) that Mr. Hodgson might act on somewhat similar lines.

Mr. GEORGE SAXON said he did not think it was well to advise anyone to adopt an uneconomical method of manufacture in

order to take up surplus labour. The balance requiring adjustment when machinery was introduced would be regulated in some other way, and the surplus labour would in some direction or other find employment. It was a mistake to adopt uneconomical methods, instead of taking advantage of machinery and other things tending to economy and efficiency, and letting surplus labour adjust itself.

Question 3.

"Is there any gain in economy by heating feed water with 'live steam' from the boiler?

If so, how can this be accounted for?"

Mr. W. Ingham said this question had excited considerable attention latterly, particularly amongst marine engineers. Some six years ago in order to get over the difficulties experienced with marine boilers, and indeed, with all boilers having no external flues—that was the difficulty of leakage and drainage on the bottoms—live steam heating was adopted so as to fill the boilers with hot water and promote better circulation. It was unexpectedly found that in addition to preventing leakage a considerable gain in economy was effected. At first this was accepted with a certain amount of incredulity, because every one knew how much heat was obtainable from a pound of steam, and if a pound of steam was taken from the boiler and put in the feed water, they could not get more heat in the boiler by this means than had been taken out of it, and it was described as a case of "robbing Peter to pay Paul."

How could this economy be accounted for? In land practice they pretty well utilised all the waste heat in every possible direction. They were also utilising exhaust steam by means of feed water heaters, ejector and evaporative condensers, &c. They could use waste heat in different ways. Although every one might not have waste heat to utilise, they had all "live"

steam, and if it was a fact as the balance of evidence seemed to show, that "live" steam could be used with great economy, then there was room for further economy in land practice.

Different theories had been promulgated on this point. He did not think it could be accounted for on thermo-dynamic considerations. The testimony certainly appeared to show that such economy was a fact, but a letter in *Engineering* that day gave particulars of two voyages made of a vessel, on one occasion with, and on the other without, a "live" steam heater, and the coal consumption was exactly in each case the same, so that it did not appear to be in all cases certain that advantage would be derived from "live" steam. One theory was, that the more rapid circulation induced, enabled the water to take up heat more quickly. In that case there ought to be a diminution in the temperature of the waste furnace gases, but experiment seemed to show that this was not the case.

Mr. A. Saxon said he thought the economy was due to the latent heat contained in the steam. In connection with feed water they all knew that it was passed into the boiler, not into the steam space where the latent heat would be, but into the water space below the steam line. He might say that in connection with large mills no better system could probably be obtained than by using economisers and using waste heat from the chimney gases, but in connection with marine practice, and perhaps on a smaller scale, or on a scale in which economisers could not be used, he believed economy would result from the application of this latent heat contained in the steam over and above that of the water which it converted into steam. Taking water at 212° it had only $\frac{1}{12}$ the heating power of steam at the same temperature.

Mr. A. Etchells said it seemed to him to resolve itself into a question of maintaining the average condition in the boiler

undisturbed. Taking the "fatigue" point of view, it was well known that an engine would be more economical if they kept the speed nearly constant. The question seemed to be whether it was more economical to put cold water into a boiler, which certainly destroyed the average condition, or to put it in a separate place of its own, introduce live steam into the feed water before it went to the boiler, and introduce the water into the boiler at practically the average condition of things.

Mr. Samuel Boswell said the economy from heating by live steam seemed to have been known for nearly thirty years by locomotive engine drivers, who found that they could keep steam up better, during a heavy run, by having a water warmer on throughout the whole run—not only when they were standing—always using the pump or injector fixed on the same side as warmer, the live steam mixing with feed just previous to entering boiler.

His opinion was that the higher the temperature of the waste gases the better chance they had of economy, if they only kept the initial furnace temperature up in the same proportion.

If they put in feed of a greatly different temperature, and it came in contact with the furnaces they would find a loss. Economy had been found in carrying the feed at or near the back end of the boiler, but they could not do that generally because the internal feed pipes would often become full with deposit. Where it had been done, however, it had been advantageous.

He was quite prepared to believe the statistics of some of the marine engineers. They were under favourable circumstances; everything was self-contained, and they could get at the accurate facts. His experience pointed in the direction that economy was possible because they got a better equilibrium in the boiler itself.

Gases escaping at a low temperature did not always show they were working economically by any means. They could pass away a higher temperature and still get a better result. It was simply a question of equilibrium.

Mr. MITTON said many facts proved the theory of equilibrium. There were no sudden changes in the condition of the steam or the water, thus making a more efficient mechanical device rather than an economical one.

Mr. WALTON said it was a question of whether there was any gain in economy by heating feed water with live steam, *i.e.*, steam direct from the boiler, and which had done no work whatever.

They generated steam in the boiler to do work either in the engine or some other place. They took that and used it to transmit heat to the water and raise the temperature of that water to boiling point, if possible, at that pressure. Was there any gain in generating steam, to condense it again just simply to heat up the water. As a preservative of the boiler it was one of the grandest things invented in steam practice, but was it "robbing Peter to pay Paul," or a decided gain in heat?

The PRESIDENT then closed the discussion.

43RD Annual Report

OF THE COUNCIL,

1898.

MANCHESTER:
HERALD & WALKER, POOL FOLD CHAMBERS, OFF CHAPEL WALKS.
1899.

OFFICERS.

1899.

President:

MR. HENRY WEBB.

Past-President:

MR. JOS. NASMITH.

Treasurer:

MR. JAMES WALTHEW.

Trustees:

MR. G. CARTER,
,, T. ASHBURY,
MR. JOHN WEST,
,, SAML. DIXON
SIR W. H. BAILEY, J.P.

Council:

MR. J. BARTLAM.
,, H. HODGSON,
,, W. INGHAM,
MR. W. FOX,
,, J. SAXON,
,, W. SMITH.

Librarian:

MR. R. GASS,
19, City Road, Higher Openshaw.

Secretary:

MR. FRANK HAZELTON,
100, Ayres Road, Brooks' Bar, Manchester.

Annual Report of Council,

1898.

The Council have pleasure in presenting the 43rd Annual Report of Proceedings.

To the membership roll during the year have been added—

1 Honorary Life Member.
29 Honorary Annual Members.
27 Ordinary Members.

Total 57

and after taking into account the loss by death, resignation, and erasure, the total number of names of all classes on the roll amounts to 416, as against 386 in the previous year, namely:—

27 Honorary Life Members.
148 Honorary Annual Members.
241 Ordinary Members.

416

Upon reference to the Financial Statement, as certified by the auditors (see pages 223, 224), it will be seen that the balance standing to the credit of the Association, after payment of all accounts due up to the 31st December, amounts to £4,224 7s. 3d., as against £4,025 19s. 8d., at the close of the preceding year, thus showing a surplus of £198 7s. 7d. on the year's working.

They are pleased to report that during the year the payment to the superannuant members has been at the rate of 10s. per week, according to rule, the total sum paid on this account amounting to £168 10s. 0d. as against £128 1s. 0d. in the previous year.

The number of recipients from this fund has been increased by two during the current year, thus making seven members at present receiving superannuation allowance.

It is with profound regret the Council have to record that during the year death has removed the following members, brief memoirs of whom are appended on pages 217-222 :—

Blears, T.	Manchester.
Dobson, Sir B. A.	Bolton.
Gledhill, M.	Manchester.
Hulse, J. W.	Do.
Johnston, D.	British Guiana.
Kelsall, J. E.	Bolton.
Marshall, J.	Hyde.
Purves, J. H.	Manchester.
Ross, R. C.	Do.
Shenton J.	Hyde.
Wrigley, T.	Todmorden.

The following gentlemen have resigned their membership during the year.

Fletcher, S.	Ashton-under-Lyne.
Spencer, H. B.	London.
Lewis, G.	Manchester.
Patrick, F. W.	Do.

The following gentlemen have ceased to be members during the year.

Bradley, H. W.	Manchester.
Buckley, E. W.	Do.
Firth, G. H.	Yorkshire.
Haworth, C. V.	Poulton-le-Fylde.
Haigh, N. N.	Oldham.
Roberts, J.	Manchester.
Roberts, W. J.	Bristol.
Shoubridge S. Y.	Manchester.
Sample, W. S.	Do.
Sugden, E.	Rotherham.
Smith, W. W.	Manchester.
Wrigley E. G.	Birmingham.

During the year, in addition to the ordinary meetings, the following Excursions and Social Gatherings have taken place, brief accounts of which are included herewith :—

Feb. 12.—42nd Anniversary Dinner, Grand Hotel. Attendance 213.

May 12. –Visit to Rugby for inspection of the Works of Messrs. Willans & Robinson. Attendance 130.

July 16.—Visit to Knowsley for inspection of the Park and Hall, the seat of the Earl of Derby. Attendance 66.

Oct. 8.—Visit to the Manchester Ship Canal, Trafford Wharf, for inspection of the New Grain Elevator. Social Meeting, Grand Hotel, Attendance 160.

Nov. 23.—Conversazione at the Art Gallery, Manchester. Attendance 300.

Papers Read and Discussions held during the Year.

Jan. 15.—Inaugural Address by the President, Mr. Henry Webb, on "English and American Workshop Practice."

,, 29.—On "Engineering Appliances in Mining," by Mr. C. M. Percy.

Feb. 26.—On "Balancing of Engines," by Mr. J. Whitcher.

Mar. 12.—On "Various Topical Subjects."

,, 26.— Ditto.

Oct. 8.—On "Some Points in Modern Steam Engine Practice," by Mr. Henry Hodgson.

Nov. 12.—On "The Manchester Sewage Problem," by Mr. M. Ingram.

,, 26.—On "The Use of Steel in Buildings," by Mr. E. Wood.

Dec. 10.—On "Various Topical Questions."

The Council, in conclusion, desire again to express their cordial thanks to those members and friends, who have read papers or contributed to the discussions during the year.

ANNIVERSARY DINNER.

The Forty-second Anniversary Dinner was held Saturday, February 12th, at the Grand Hotel, upwards of 213 gentlemen being present. Mr. Henry Webb, the President, occupied the chair, with Mr. Joseph Nasmith, the past President, in the vice chair, and the gathering included, in addition to those whose names were associated with the various toasts, Sir Bosdin T. Leech, Dr. Sinclair, and Mr. F. Hazelton (the Secretary).

After dinner a long programme of speeches and music was entered upon. The music was provided in admirable fashion by the Royal Apollo Glee Singers, from Staffordshire, and by Mr. Harrison Hill, humourist.

The CHAIRMAN gave the loyal toasts, and Mr. NASMITH followed with "The Houses of Parliament," coupling with it the names of Lord Strathcona and Mount Royal, and Mr. James Kenyon, M.P.

Lord STRATHCONA, in his reply, said although by the gracious will of Her Majesty he was a member of the peerage, he was not a member of the House of Lords, because during the months that had elapsed since he was raised to the peerage he had been too busy or too much out of the country to be able to take his seat. So that up till now he had not really seen the inside of the House of Lords, and he was much more familiar with the Parliament of Canada than with that of Great Britain. Twenty-seven years ago he took his seat in the Canadian House of Commons, and till within a little more than a year and a half ago he remained a member of that House. He could sincerely say, from all his experience of the people and Parliament of Canada, that there were no more true English hearts to be found portion of the United Kingdom than were to be found

in the Dominion of Canada. That remark did not apply to one portion of the country or another, but to the whole length and breadth of it. Whether the mother tongue was English or French, the loyalty and affection of the people to Queen Victoria and this country were the same. There was a greater population within ten miles of Manchester than in the whole of British North America, but they had plenty of land there of the best description, and they were waiting for good Englishmen, good Irishmen, and good Scotchmen to come and till it. It was their desire that the Parliament of Great Britain should be maintained, as it had been in dignity, to do the best work possible for the mother country and the whole Empire.—(Cheer.)

Mr. Kenyon, M.P., alluded in the course of his reply to the Workmen's Compensation Act, which he described as an excellent measure, and one that would do a great deal of good.—He knew there was a difference of opinion, but he hoped they would allow him to have his opinion.—(Cheers.) He believed that the bill would do an immense amount of good in this country.—(The High Sheriff: "Question, question.") He believed it treated the workmen in a better way than they had ever been before.—(Hear, hear.) The expense incurred by the Act would simply be a trade charge – (a Voice : "Sectional"), —and every man in a trade would be under the same obligation and would have to bear the same cost. He believed the Act would not interfere at all with the business of the Country. As to foreign competition, it must be remembered that in this matter France and Germany were placed on pretty much the same footing as we now were.—(Hear, hear.) It had been said that the Act was sectional, but he had no doubt that if it worked satisfactory it would be applied to the trades of the country generally. He claimed that it was a good bill, and that if there

was any trade in the country that could not afford to pay compensation to the workmen engaged in it, the sooner it was shut up the better.—(Hear, hear.)

Mr. S. R. Platt (High Sheriff of Lancashire) gave the toast of "The Trade of the District." He said he was sorry to say that the trade of the district had not being going on during the last few months as it ought to have done. The employers in the engineering trades had had a very bitter and severe fight with those men whom in ordinary circumstances they would naturally have expected to rally round them and help them to maintain the trade of the district. They had always thought that the men were part and parcel of themselves.—(Hear, hear.) Unfortunately they had been led away by sophistry, by the idea that somehow or other the unions could do better for them than the chaps who paid them their wages.—(Laughter.)

As one of those who supported the Federation in the struggle from which they had emerged, he thought they were thoroughly justified in resisting the stupid, ridiculous demands of a few men who knew no more of what they talking about than one of the candles on the table before him—men who were Socialists from every point of view, and who would upset the whole status of the country if they could. The employers could now go back home feeling that their places of business were their own, and that they could do what they liked with their own—that they could talk and say that they would have the thing done at this or that price or not done at all. It must be thoroughly understood that the man who paid the wages was the man who was master in his own shop.—(Hear, hear.) Do not let them think that because there was a treaty of peace signed the end was come. The end was not come. They must and they would stick together as a Federation and in a bond of brotherhood it would do every one of them good. In these remarks he

was not saying anything at all about wages, because that was a matter that regulated itself.—(Hear, hear.) They had no intention at all of making the position of those who worked for them different from what it was. That was one of the things he wished to go forth to the public. They respected their men. They knew what their men did for them, and if they had only the same respect for the masters as the masters had for them there would never be any difficulty between them.—(Cheers.)

Colonel H. C. S. Dyer, introduced by the chairman as "the best friend the working men ever had," was received with loud and prolonged cheers on rising to reply to the toast. He said he trusted that in the near future what they had given him such a reception for would be found to have done good both to employers and to workmen. What the President had said of him had appealed very strongly to his feelings; there was nothing he felt so thoroughly proud of as the fact that in the very near future the workmen would look upon him as their best friend.—(Cheers.) Flattering as the President's remarks were, especially when they came from such a source, he felt that they were deserved. He believed that all he had done—and he had done it with that object—had been for the benefit of the working men, for he felt that whatever good was done for the employer was also done for the working men.—(Hear, hear.)

After some remarks on the subject of the address recently delivered by the President of the Association, of whose suggestions for the maintenance and increase of our trade he approved, Colonel Dyer reverted to the recent struggle. It had, he said, been a most unfortunate one, but out of our greatest misfortunes frequently came our greatest good.—(Hear, hear.) There was nobody had a higher respect and higher admiration than he had for the press of the country. He admired the courage of the newspapers; he respected their purity and almost always

bowed down to their judgment.—(Laughter.) But did they take a wise course during the dispute?—(No.) Had they not rather fomented ill-will and brought forth feelings which never should have arisen? Suppose any one of them went into a shop to buy an umbrella. The shopkeeper, showing one, said the price of that was 15s., and the customer offered 14s. 6d., which price not being accepted, he went away. What would they think if the press came out the next morning with big lines like this:—"Grand victory of the umbrella-makers. Utter rout of the purchaser. Sent out in a shower of rain and spoils his best hat?"—(Laughter.) Later on the customer went into the shop and said he would give 14s. for the umbrella, and the shopkeeper, having reconsidered the matter, sold it to him at that figure. And then appeared the lines—"Utter rout of the umbrella sellers. Crushed them down and destroyed their union."—(Laughter.) Did they think this kind of thing was wise? He considered that it was a very unfortunate thing. The dispute they had was this. They had a difference of opinion with their old "pal" labour on the ground of what they considered undue interference with their affairs, and the matter was fought out in a thoroughly English manner. There was no hitting below the belt; it all came straight from the shoulder. The combatants learned to admire and respect one another, and when the settlement came and the hand-grip followed, a compact was made of friendly and brotherly affection which would never again be disturbed as long as we lived.—(Cheers.)

It was not a question of defeat on one side and of victory on the other; these words ought never to have been used. Both sides had had enough of it, and they said to each other, "Let us now join hands and see if we can beat the foreigners in our gates—let us combine to resist them, so that they shan't come and interfere in the field of labour we have made our own." That was the position. There was no ill-feeling left at all, and

he believed honestly that the Employers' Federation were the best friends the workmen ever had or ever would have. Public opinion in the Federation would run very strongly in the direction of justice and honour and purity. The Federation would never see a workman oppressed, if the idea of oppression should occur to any employer.—("It is not necessary.") No, it was not necessary that any employer should seek to make his men work on terms that were not just and equitable. And therefore he said that what had happened had been for the best. On a former occasion he defined the proper functions of a trade union—and he believed the definition had the support of the whole Federation—to be to prevent any of their members being oppressed, and to obtain the best conditions and the best remuneration they could for their labour. But when the trade unions said "We intend to come and help you in the management of your business," they said, "Gentlemen, you can't do it—you have not the education, the intelligence, the experience that we have in these things; you cannot be in partnership with us, because to be in partnership you must take your partner for better, for worse—you cannot have all better and no worse; you cannot have all profits and no losses."—(Hear, hear.) His contention was that the partnership it was proposed to make between capital and labour was an absolute impossibility—it could not be, but you could have good feeling and friendship between them, and that, he believed, they would have. Lamentable as the dispute had been, it was not without its comic side. In such matters Providence generally furnished us with compensations. The comic side of the business was the way in which the prelates and the philanthropists, professors and politicians, rushed into the arena with minds entirely unprejudiced by any previous knowledge of the subject—(laughter and cheers),—armed with crude panaceas for all the ills of trade. Really that was the comic side. They did their

very best; their intentions were good, but he felt sure they were all agreed that those intentions went to increase the pavement of good intentions we all knew about.—(Laughter.) If they had not attempted to interfere on a subject of which they knew absolutely nothing it would have been wiser in them and better for all concerned. What was needed was quietness, security, and absolutely no interference in the management of their business.

They wanted also—and they wanted it probably more than anything else—the schoolmaster abroad. They wanted the schoolmaster to teach the working-man, for example, how fatal was the fallacy that the less a man did the more there was left for his neighbour to do. It was the most awful fallacy that ever was enunciated. The history of the past had proved beyond the shadow of a doubt that the larger the turnout of work the more men were employed and the higher the wages paid. It was therefore their bounden duty to pull up that fallacy by the root and chuck it away.—(Hear, hear.) Another fallacy—he thought Adam Smith was the originator of it—was that labour was the sole source of wealth. That was just as true as if anybody said that coal was the source of power. Both statements were perfectly true in the abstract, but it must not be forgotten that coal and labour were both inert masses until they were galvanized into life by organization and intelligence.—(Hear, hear.) These were points on which the efforts of the schoolmaster were much needed. As the spread of education went on these fallacies would no doubt disappear, and the better would be the relations between employers and workmen. He was perfectly certain that now that the air had been cleared by the unfortunate disturbance they would have an easy time, and that if the workmen would only join with the employers in giving a long shove, a strong shove, and a shove altogether, the trade of England would rise superior to all its difficulties, and

we would regain that supremacy which we had unfortunately lost by the errors of the past.—(Cheers.)

Mr. J. S. RAWORTH proposed "Prosperity to the Association."

The CHAIRMAN, in his reply, stated that the Association had now 386 members, and that it was, financially, in a flourishing condition. He suggested that something should be done in the way of finding a permanent home for the Engineering societies of the district.

Sir. W. H. BAILEY proposed "Our guests," and the LORD MAYOR OF MANCHESTER (Mr. Alderman Gibson), and Mr. W. B. WORTHINGTON replied.

The concluding toast, the health of the Chairman, was proposed by Mr. T. ASHBURY, and acknowledged by the CHAIRMAN.

OPENING MEETING OF DISCUSSION SESSION.

The Inaugural Meeting of the Forty-third Discussion Session was held on Saturday, the 8th October, upwards of 160 members attending.

In the afternoon the members, by the courtesy of the Chief Engineer, visited and inspected the new Grain Elevator of the Manchester Ship Canal, situate at the Trafford Wharf.

After the inspection the party were conveyed in 'Busses to the Grand Hotel, where tea was served.

Subsequently a Meeting was held, the chair being taken by the President, Mr. Henry Webb, who briefly alluded to the programme for the session.

Mr. W. H. HUNTER then gave a short address on the inception and construction of the Elevator, to which, on the motion of

Mr. JOHN WEST, seconded by Mr. ASHBURY, a cordial vote of thanks was passed by acclamation.

The remainder of the evening was devoted to the carrying out of an interesting musical and vocal programme.

LIBRARY.

The Council have pleasure in acknowledging the following donations to the Library :—

Indicator, Handbook on.
Presented by the Author, Mr. C. N. Pickworth, Member.

Government Reports on Boiler Explosions.
Presented by a Friend, per Mr. Henry Bates, Member.

The Association exchanges Transactions with the following :—

American Institute of Mining Engineers.
,, Society of Mechanical Engineers.
Canadian Society of Civil Engineers.
Engine, Boiler, and Employers Liability Insurance Company.
Franklin Institute, America.
Institution of Civil Engineers of England.
,, Engineers and Shipbuilders in Scotland.
,, Mechanical Engineers.
Iron and Steel Institute.
Liverpool Engineering Society.
Manchester Geological Society.
,, Literary and Philosophical Society.
Midland Institute of Mining, Civil and Mechanical Engineers.
Mining Association and Institute of Cornwall.
Mining Institute of Scotland.
North of England Institute of Mining and Mechanical Engineers.
North-East Coast of Engineers and Shipbuilders.
South Wales Institute of Engineers.
Society of Engineers.

The following Publications are received periodically :—

Cassier's Magazine.
Colliery Guardian.
Engineering Magazine.

Electrical Review.
Engineer.
Engineering.
Industries and Iron.
Iron and Steel Trades' Review.
Marine Engineer.
Mechanical World.
Practical Engineer.
Textile Mercury.
,, Recorder.
,, Manufacturer.

REPORTS OF EXCURSIONS.

VISIT TO RUGBY.

On Thursday, the 12th of May, upwards of 130 Members visited Rugby for the purpose of inspecting the new Victoria Works of Messrs. Willans & Robinson.

The party departed to Rugby by the ten o'clock train, and on arrival they were served with luncheon at the Station Restaurant; subsequently the party were conveyed in brakes to the works, and there were cordially received by the principals, Messrs. Mark Robinson, Capt. Sankey, and Mr. Lazenby. The works were then inspected, after which a light tea was served in the mess room of the works. The President, Mr. Henry Webb, expressed the thanks of the members for the courtesy accorded to them by the Firm, and on the motion of Sir W. H. Bailey, seconded by Mr. Joseph Nasmith, a formal resolution of thanks was passed by acclamation. After a brief acknowledgment by Mr. Robinson, Capt. Sankey, and Mr. Eaton Shore, the party were reconveyed to the Station in brakes, and arrived in Manchester at 8-15 prompt.

VISIT TO KNOWSLEY.

On Saturday, the 6th July, the Members and their Lady Friends visited Knowsley, with the object of inspecting the Park and the Hall, the seat of the Earl of Derby. 66 attended.

The party left Manchester in the afternoon for Rainhill, from which Station they proceeded in conveyances to inspect the Park and its picturesque surroundings. On arrival at the Hall they were courteously conducted

through the various rooms which were greatly admired and appreciated. Subsequently the party returned to Prescot, where tea was served at the Royal Hotel, under the presidency of Mr. Henry Webb.

After tea, the President, in the briefest words, alluded to the pleasant and enjoyable day which had been spent, and to the great and exceptional kindness of the Earl in favouring the Association with the privilege of inspecting his ancestral home.

CONVERSAZIONE AT THE ART GALLERY.

On Wednesday, the 23rd November, a Conversazione of the Members and their Ladies was held at the Art Gallery, Mosley Street, Manchester, which had been kindly placed at the disposal of the President and Council by the Art Gallery Committee.

The weather, unfortunately, at the time of meeting turned out rather unpropitious, but notwithstanding this 300 Ladies and Gentlemen attended.

The President, Mr. Henry Webb, supported by the past Presidents, Messrs. Samuel Dixon, T. Ashbury, John West and Joseph Nasmith, held a Reception at eight o'clock, and extended to the guests a cordial welcome. The evening was spent in viewing the permanent Art Collection, as well as the Autumn Exhibition of Pictures. At appropriate intervals selections of music were given by the Northern Military String Band, which was in attendance, by the courtesy of Mr. S. H. Brooks, of Manchester, and also the Minster Vocal Quartette Party rendered several interesting part songs, which were highly appreciated. Altogether a pleasant and interesting social evening was passed by those who were present.

At the subsequent ordinary meeting of the Association the Conversazione was alluded to, and on the motion of the President it was resolved

> That the cordial thanks of the Members be and are hereby accorded to the Chairmen respectively of the Art Gallery and Parks Committee, to Mr. Samuel H. Brooks, and to others concerned for their assistance and hearty co-operation rendered in respect to the recent Conversazione.

Mr. T. Ashbury then pointed out that the Conversazione had been practically held on the initiation of the President, and considering that it was a unique meeting in their Association, and so exceptionally enjoyable, it would not do to allow that opportunity to pass without evincing their appreciation of the President's thoughtfulness and generosity. Mr. Ashbury's remarks were cordially seconded by the members present.

OBITUARY.

Sir BENJAMIN A. DOBSON was born in Douglas, Isle of Man, and resided for many years in Belfast. On going to Bolton he became connected with the extensive cotton spinning machine-making works at Kay Street, which now finds employment for nearly 5,000 men and boys, and which were established by his grandfather (Mr. Isaac Dobson) considerably over a century ago. The works have been much extended during recent years, largely owing to Sir Benjamin's business capacity and energy. His attainments as a mechanical engineer were recognised by the French Government as long ago as 1878, when he received the Ribbon of the Legion of Honour, whilst other countries, notably Japan, had also publicly testified to his skill. Despite the claims of business he found time to devote to the public service, and 23 years ago he first entered municipal life as a Councillor for North Ward. Six years later he was made Alderman. He was for many years Chairman of the Parks Committee, subsequently resigning this position to take up that of Chairman of the Technical Instruction Committee. He was regarded as the father of the local technical school. His practical knowledge greatly assisted in the development of the scheme of technical education, and the firm with which he was connected showed a genuine interest in the undertaking by presenting to the school a quantity of valuable spinning and other machinery, and also by establishing a series of scholarships for the benefit of the apprentices in their employment. In 1894 he was unanimously elected Mayor, and at the time of his death was occupying the Mayor's chair for the fourth year in succession. He was the first Mayor of the town to retain office for a fourth year. His latest and most important work on behalf of the municipality was done in connection with the extension of the borough boundaries, which, unfortunately, he has not

lived to see carried out. It is generally admitted that no other man in the town could have accomplished what Sir Benjamin did in this matter. On two previous occasions applications had been made, though unsuccessfully, for the extension of the borough boundaries, the whole of the districts which it was sought to include offering strenuous opposition. On the present occasion Sir Benjamin Dobson succeeded in conciliating the out-districts, and they are, without exception, co-operating with the Corporation in seeking the extension, the only real opposition coming from the Lancashire County Council, and this it was expected Sir Benjamin Dobson would have been able to surmount. It would be impossible in this brief record to enumerate his many services to Bolton, but it is safe to say that his loss will be felt for many years to come, and that his position will be very difficult to fill. He was knighted at the Diamond Jubilee. He was a county and borough magistrate and a lieutenant colonel of the local volunteer corps, in which he took an active interest. He was an enthusiastic Churchman, and took a deep interest in the welfare of denominational schools. He was the author of works of considerable repute, dealing with cotton spinning and cotton machinery.

He was elected an Honorary Member of the Association in 1893. He died March 4th, 1898.

David Johnston was born at Newton-Mearns, near Glasgow, sixty-six years ago, he being the eldest of a family of six, of whom now only one daughter survives. His father left Newton-Mearns and removed to Pollokshaws when David was a little boy, and there the subject of this brief and imperfect memoir spent his early boyhood and received his schooling. When only a lad, he went to learn his business at an engineering works near Glasgow, where, after spending some time in the

pattern shop, he served his apprenticeship as a mechanical engineer. Some time after completing his apprenticeship, and when he was only twenty-two years of age, Mr. Johnston was appointed engineer in charge of Thornliebank Print Works, near Pollokshaws. From there he removed, some years later, to another engineering establishment, which he left to assist his friend, and at one time fellow worker, Mr. Duncan Stewart, in establishing the business which has now a world-wide reputation (as Duncan Stewart & Sons) for the excellence and stability of its machinery. The site chosen for these now famous works was occupied by a weaving factory, which Mr. Stewart and Mr. Johnston speedily dismantled and turned into an engineering shop. After seeing his friend set-up, Mr. Johnston accepted an engagement to proceed to Levenshulme, near Manchester, to establish and superintend cloth print works. There he remained till 1873, when, on the recommendation of Mr. Duncan Stewart, he was appointed engineer of Messrs. Ewing's sugar estates in Demerara and his first connection with the colony began in that year. The proprietors and employees of the works at Levenshulme parted with Mr. Johnston with much regret, and presented him with a gold watch as a souvenir of their regard and as an expression of their best wishes for his future welfare. After remaining at Vryheid's Lust for about seven years, Mr. Johnston returned to England, but he was not long there before he left for the Cape of Good Hope, where he erected large flour mills and where he remained three years. In 1883, when he was at the Cape, he received a telegram offering him the appointment as engineer of the Colonial Company's estates in Berbice, in succession to the late Mr. Wintrup. He accepted the offer, returned to the colony and became a citizen of New Amsterdam, remaining in the employ of the Colonial Company to the day of his death.

He was elected an Ordinary Member of the Association in 1869.

JOSEPH WHITWORTH HULSE was born at Withington, near Manchester, on 24th August, 1861, being the second son of the late Mr. William Wilson Hulse. He was educated at Uppingham School, and in 1876 began his apprenticeship to his uncle, Mr. Joseph Sykes Hulse, at the Ordsal Works, Salford. On the death of his father, who had succeeded his uncle in 1881, he became the proprietor of these works in 1897. In machine tools he introduced several improvements; and also in calico printing machinery, which was made by his firm in combination with machine tools. During the engineering dispute in the latter half of 1897, he took an active part in the management of the local branch of the Employers' Federation, of which he was appointed joint representative with the late Colonel Dyer. His death took place at Didsbury, near Manchester, on 20th April, 1898, in the 37th year of his age.

He was elected an Honorary Member of the Association in the year 1886.

MANASSAH GLEDHILL was elected an Ordinary Member of the Association in the year 1862.

He was chiefly known by his Association with the firm of Sir W. G. Armstrong, Whitworth and Company Limited, and previous to the amalgamation, with the firm of Sir Joseph Whitworth and Company, of Openshaw. His career may, indeed, be said to have been almost contemporaneous with the building up of this great firm, and in various capacities, but chiefly in that of director and manager, his long experience and practical knowledge of the work have been invaluable to the undertaking. He began working for the firm about the year 1852 as a turner, and rose steadily through all the grades of employment until he finally occupied the position of managing director. When the Company was re-formed Lord Armstrong became chairman, and Sir Andrew Noble managing director. Mr. Gledhill, however,

remained a member of the Board until his death. He was endowed with the gift of invention, and the development of the Whitworth hydraulic forging presses, now of world-wide fame, are due to his genius. He took out other patents connected with the forging of metals, and the manufacture of ordnance upon which he was an authority.

He died on the 13th September, 1898, aged 66 years.

THOMAS BLEARS received his early technical training at various places, and latterly was for considerable time with Messrs. Galloways Limited. During the year 1896 he finally severed his connection with this firm and started a small works of his own.

He was elected an Ordinary Member of the Association in 1892. He died suddenly on the 23rd November, 1898.

JOHN H. PURVES was elected an Honorary Member of the Association in June, 1897, when he was manager of the Garratt Street Works, Miles Platting.

He died in December of the same year.

ROBERT C. ROSS was one of the oldest members of the Association, having been elected in 1862.

He died suddenly on the 8th of June, 1898, age 83 years.

JAMES SHENTON was trained as a boilermaker, and by his energy and enterprise established an important works at Hyde.

He was elected an Honorary Member of the Association in 1885. He died suddenly in June, 1898.

JAMES E. KELSALL received his training at the Crewe works of the L. & N. W. Railway Co., and passed through the shops, laboratory and steel department. In 1874 he was given entire

charge of the laboratory, which he retained till about the year 1896, when he became connected with the Bolton Steel and Iron Company.

He was elected an Honorary Member of the Association in 1895, and was a Member of Council at time of his decease. He died 5th June, 1898.

THOMAS WRIGLEY was for a many years connected with the firm of Fielden Bros., Todmorden, going through various grades and ultimately became a managing director of the Company.

He was elected an Honorary Member of the Association in 1895. He died October 29th, 1898.

JOSEPH MARSHALL served his apprenticeship wiih Messrs. J. & S. Shornely, of Hyde, and afterwards was for five years chief engineer with the same firm. He then for some little time was engaged with a Mr. Parmelee in connection with automatic sprinklers, afterwards going to the works of Messrs. Mather & Platt, Salford, as a sub-contractor. About 1890 he commenced business on his own account at the Millwood Iron Works, Hyde, as a hatter's machinist and general engineer.

He was elected an Ordinary Member of the Association in 1891. He died August 4th, 1898, aged 48 years.

TREASURER'S GENERAL CASH ACCOUNT, for the year ending 31st December, 1898.

Dr. (Including Superannuation Fund Account.) **Cr.**

1898.			£ s. d.
Jan. 1.	To Balance as per last Report		4,025 19 8
Dec. 31.	„ Contributions and Entrance Fees		604 7 6
	„ Interest from Mortgages on Properties	£113 0 6	
	„ „ „ Leeds Corporation 3½ % Stock	20 6 0	
	„ „ „ Bank	7 4 8	
			140 11 2
	„ Transactions sold		24 0 11
			£4,794 19 3

1898.			£ s. d.
Jan. 1.	By Rent—Grand Hotel		20 0 0
to	„ Secretary's Salary	£50 0 0	
Dec. 31.	„ Librarian's „	10 0 0	
			60 0 0
	„ Superannuation Allowance		168 10 0
	„ Funeral Allowances:		
	R. C Ross	£10 0 0	
	D. Johnston	10 0 0	
	T. Blears	10 0 0	
			30 0 0
	„ Printing and Lithography of Transactions	£61 6 3	
	„ Binding of do.	22 12 6	
	„ Member's Lists	18 0 9	
	„ General Circulars and Miscellaneous Work	25 18 6	
	„ Stationery	5 0 0	
			132 18 0
	„ Insurance premium on Library		0 6 0
	„ Expenses re Anniversary Dinner		20 16 8
	„ Audit, General Council and Sub-Committee Exs.	£20 13 5	
	„ Postages of Papers, Circulars, and Correspondence	34 10 7	
	„ Sundries	15 5 8	
			70 9 8
	„ Delivery of Annual Volumes		6 10 0
	„ Books for Library		2 1 8
	„ New Library Case		8 5 0
	„ Expenses re Opening of Discussion Session		7 0 0
	„ Loss in London Road Building Society		43 15 0
	„ Cash invested in Properties: Mortgages	2,550 0 0	
	„ „ „ Leeds Corporation 3½ % Stock	600 0 0	
	„ „ „ Premium on do.	90 6 6	
			3,240 6 6
	„ Cash in Bank	£918 18 4	
	„ „ Treasurer's hands	57 10 7	
	„ „ Secretary's „	7 11 10	
			984 0 9
			£4,794 19 3

Audited and found correct

J. PARRY,
J. V. EVES.
J. GLENNE. } AUDITORS.

1899.
[illegible] Jan., 1899.

SUPERANNUATION FUND ACCOUNT, for year ending 31st December, 1898.

Dr. (Included in General Account.) **Cr.**

1898.		£	s.	d.	£	s.	d.
Jan. 1.	To Capital invested as per Resolution passed at the Half-yearly Meeting, 14th June, 1879	2,100	0	0			
	,, Additional Capital voted at the Annual Meeting, 13th December, 1889	300	0	0			
	,, Additional Capital voted at the Annual Meeting, 12th December, 1891	600	0	0			
	,, Ditto, 11th December, 1897 ..	500	0	0			
					3,500	0	0
	,, Balance from last Report				52	3	4
Dec. 31.	,, Twelve Months' Interest on above Capital Invested as per Rule				128	6	6
					£3,680	9	10

1898.		£	s.	d.	£	s.	d.
Jan. 1. to Dec. 31.	By Superannnation Allowances :— Mr. John R. Wolstenholme	26	0	0			
	,, William Holmes.....	26	10	0			
	,, John Dutton	26	10	0			
	,, James Schofield	26	10	0			
	,, E. Kershaw.....	26	10	0			
	,, J. R. Hill.....	26	10	0			
	,, J. G. Cochrane	10	0	0			
					168	10	0
	,, Balance to credit of Superannuation Fund Account.....				3,511	19	10
					£3,680	9	10

Audited and found correct,

J. PARRY,
J. W. EVES, } AUDITORS.
J. GLENNIE,

11th January, 1899.

THE NEW YORK PUBLIC LIBRARY
ASTOR, LENOX AND TILDEN FOUNDATIONS